UNIFIED FACILITIES CRITERIA (UFC)

DRAFT

DESIGN: NAVY AND MARINE CORPS INTRANET (NMCI) STANDARD CONSTRUCTION PRACTICES

APPROVED FOR PUBLIC RELEASE; DISTRIBUTION UNLIMITED

UNIFIED FACILITIES CRITERIA (UFC)

DRAFT DESIGN: NAVY AND MARINE CORPS INTRANET (NMCI) STANDARD CONSTRUCTION PRACTICES

Any copyrighted material included in this UFC is identified at its point of use. Use of the copyrighted material apart from this UFC must have the permission of the copyright holder.

U.S. ARMY CORPS OF ENGINEERS

NAVAL FACILITIES ENGINEERING COMMAND (Preparing Activity)

AIR FORCE CIVIL ENGINEER SUPPORT AGENCY

Record of Changes (changes are indicated by **1**\ ... /**1**/)

Change No.	Date	Location

FOREWORD

The Unified Facilities Criteria (UFC) system is prescribed by MIL-STD 3007 and provides planning, design, construction, sustainment, restoration, and modernization criteria, and applies to the Military Departments, the Defense Agencies, and the DoD Field Activities in accordance with USD(AT&L) Memorandum dated 29 May 2002. UFC will be used for all DoD projects and work for other customers where appropriate.

UFC are living documents and will be periodically reviewed, updated, and made available to users as part of the Services' responsibility for providing technical criteria for military construction. Headquarters, U.S. Army Corps of Engineers (HQUSACE), Naval Facilities Engineering Command (NAVFAC), and Air Force Civil Engineer Support Agency (AFCESA) are responsible for administration of the UFC system. Defense agencies should contact the preparing service for document interpretation and improvements. Technical content of UFC is the responsibility of the cognizant DoD working group. Recommended changes with supporting rationale should be sent to the respective service proponent office by the following electronic form: Criteria Change Request (CCR). The form is also accessible from the Internet sites listed below.

UFC are effective upon issuance and are distributed only in electronic media from the following sources:

- Unified Facilities Criteria (UFC) Index http://65.204.17.188//report/doc_ufc.html.
- USACE TECHINFO Internet site http://www.hnd.usace.army.mil/techinfo .
- NAVFAC Engineering Innovation and Criteria Office Internet site http://criteria.navfac.navy.mil.
- Construction Criteria Base (CCB) system maintained by the National Institute of Building Sciences at Internet site http://www.ccb.org.

Hard copies of UFC printed from electronic media should be checked against the current electronic version prior to use to ensure that they are current.

AUTHORIZED BY:

Donald Basham, P.E.
Chief, Engineering and Construction Division
U.S. Army Corps of Engineers

Dr. James W Wright, P.E.
Chief Engineer
Naval Facilities Engineering Command

Kathleen I. Ferguson, P.E.
Deputy Civil Engineer
DCS/Installations & Logistics
Department of the Air Force

Frank Lane
Director of Analysis & Investment
Deputy Under Secretary of Defense
for Installations and Environment
Department of Defense

CONTENTS

Page

CHAPTER 1 INTRODUCTION

Paragraph 1-1 PURPOSE 1
1-2 SCOPE 1
1-3 ORDER OF PRECEDENCE 2
1-3 ORDER OF PRESENTATION 2
1-4 COORDINATION 2
1-5 APPLICATION 2
1-6 REFERENCES 2
1-7 GLOSSARY 2

CHAPTER 2 GENERAL CONDITIONS

2-1 GENERAL 3
2-1.1 Overview 3
2-2 CORE LAYER 3
2-2.1 Definition 3
2-2.2 Entrance Facility (EF) 5
2-2.3 Typical Equipment 5
2-2.4 Typical Equipment Requirements 5
2-2.5 Location 6
2-2.6 Size 6
2-2.7 Structural 7
2-2.8 Electrical 7
2-2.9 Grounding 7
2-2.10 Mechanical 7
2-2.11 Fire Protection 8
2-2.12 Classified Network Requirements 8
2-3 DISTRIBUTION LAYER 8
2-4 ACCESS LAYER 8
2-4.1 Telecommunications Rooms (TR) 8
2-4.2 Location 9
2-4.3 Size of TRs 9
2-4.4 Size of NMCI Equipment within TRs 10
2-4.5 Structural 11
2-4.6 Electrical 11
2-4.7 Grounding 11
2-4.8 Mechanical 11
2-4.9 Fire Protection 11
2-4.10 Classified Network Requirements 11
2-5 OUTSIDE CABLE PLANT 12
2-5.1 Pathways 12
2-5.2 Cabling 12
2-6 INSIDE CABLE PLANT 13
2-6.1 Pathways 13
2-6.2 Cable 14
2-6.3 Jacks and Cover Plates 14

2-6.4 Interference Considerations 15
2-6.5 Penetrations 16
2-7 Classified Network Requirements 16

CHAPTER 3 NMCI CONVERSION PROCESS

3-1 NMCI CONVERSION PROCESS 18
3-2 OVERVIEW 18
3-2.1 Coordination 18
3-2.2 Planned Construction 19
3-2.3 Material Support 19
3-2.4 Navy Facilities Engineering Commands 20
3-2.5 ROICC 20
3-2.6 Public Works 20
3-3 PHASE 1 – PREPARATION 21
3-3.1 BAN / LAN Implementation Team 21
3-3.2 Preliminary Site Questionnaire 22
3-3.3 Site In-Brief 22
3-3.4 Initial Facilities Briefing 23
3-4 PHASE 2 – JOINT ASSESSMENT / SURVEY 23
3-4.1 High Level Design 24
3-4.2 PRECON meeting 1 24
3-5 PHASE 3 – DETAILED SURVEY AND DESIGN 25
3-5.1 Team 25
3-5.2 Detailed Survey 25
3-5.3 Detailed Design 25
3-5.4 PRECON Meeting 2 26
3-6 PHASE 4 – IMPLEMENTATION 26
3-7 PHASE 5 – COMPLETION 26
3-7.1 NMCI Assumption of Responsibility 26
3-7.2 NMCI Cutover 26
3-7.3 Documentation 27

CHAPTER 4 SPECIAL CONSIDERATIONS DURING THE CONVERSION PROCESS

4-1 BUILDING POWER 28
4-1.1 Service Provision 28
4-1.2 Building Distribution 28
4-2 MECHANICAL 28
4-2.1 Existing HVAC 28
4-2.2 Cooling Guidelines 28
4-3 OUTSIDE CABLE PLANT 28
4-3.1 Assumption of Fiber 28
4-3.2 Fiber Routing 29
4-4 INSIDE CABLE PLANT 29
4-4.1 Existing Building 29
4-4.2 Wall Jacks and Cable 29
4-4.3 New Construction 30
4-5 INTERIOR FACILITIES 30
4-5.1 POP Equipment 31
4-5.2 Access and Distribution Equipment 31

4-5.3 Secure Areas 31
4-5.4 FIRE PROTECTION 31

APPENDIX A REFERENCES 33

APPENDIX B GLOSSARY 35

APPENDIX C SUPPLEMENTARY TECHNICAL GUIDANCE 40

APPENDIX D ELECTRICAL REQUIREMENTS 49

APPENDIX E PROTECTED DISTRIBUTION SYSTEMS 69

FIGURES

Figure Title

2-1 NMCI Network Architecture (Simplified) 4
2-2 Wall-Mounted Cabinet 10
2-3 Typical 2V+2D Wall Plate Configuration 14
4-1 Typical (1V+1D) Configuration 28
B-1 Single Line Drawing of EIA/TIA Facility/Function Terminology 37
C-1 Scope of TIA-J-STD-607 for Large Commercial Buildings 41
C-2 Grounding Recommendations for TIA-J-STD-607 non-Compliant Building 43
D-1 Typical One-Line Diagram for Facility POPS 51
D-2 Typical One-Line Diagram for Facility MC's/IC's 52

TABLES

Table Title

2-1 NMCI POP Facilities 7
2-2 NMCI MC Cabinet Requirements 8
2-3 TR Size Requirements 10
2-4 NMCI TR Cabinet Requirements 11
4-1 Cooling Guidelines 26
C-1 Minimum Uniformly Distributed Live Loads and Minimum Concentrated Live Loads 39
C-2 NCM Minimum Loads 39
D-1 Point of Presence (POP) 45
D-2 Main Cross Connect 49
D-3 Intermediate Cross Connect 50

CHAPTER 1

INTRODUCTION

1-1 **PURPOSE .** This UFC will be used by the Navy and Marine Corps. The Army and the Air Force do not have or require comparable criteria at this time.

This UFC provides general guidance and planning information for DoN construction and repair projects that will require Navy/Marine Corps Intranet (NMCI) network connections. It also provides information on the planning processes and general practices utilized by the current NMCI Contractor, the Information Strike Force (ISF) during initial conversion to NMCI services. All Engineering Field Divisions, Engineering Field Activities, Public Works Commands (PWC), Public Works Detachments (PWD), Resident Officer in Charge of Construction (ROICC) offices, Base Communications Officer (BCO), G6 (USMC BCO), and other concerned parties in the process, should refer to this UFC when designing, planning and/or preparing documentation for new construction or renovation projects that will require operational NMCI support.

Note: This 2nd draft version of the UFC incorporates many of the comments received from the review of the Sept 2002 Draft. However, due to the current organizational changes within the NMCI Contractor Organization and pending contract scope modifications, the document will have to be resubmitted, reviewed and approved. Upon completion of that review and the resulting coordination effort, the official UFC will be released.

1-2 **SCOPE.** This document cites and supplements existing Government and Commercial standards and specifications governing architectural, mechanical, and electrical requirements for design of NMCI required Entrance Facilities (EF) and Telecommunication Rooms (TR) with their respective Main Cross Connect (MC), and Intermediate Cross Connect (IC) equipment. In order to accommodate the rapid advances in equipment and installation practices, the industry standards should form the basis of the designs for telecommunications facilities. These include ANSI / TIA / EIA 569-A, *Commercial Building Standard for Telecommunications Pathways and Spaces*, ANSI / TIA / EIA 568-B.1, *Commercial Building Telecommunications Cabling Standard*, and NFPA 70, *National Electric Code*. MIL-HDBK-1012/3 *Telecommunications Premises Distribution Planning, Design, and Estimating* is to be used to provide specific Navy guidance on the methodologies to be followed during design of the facilities, however the designs must incorporate the latest applicable technological requirements in the current industry standards cited.

This document is not to be used for design or planning of regional server farm Facilities or Network Operations Centers (NOC). For regional server farm facilities refer to the NMCI Facilities Field Handbook located under NMCI

Information on the EFDSOUTHWESTDIV website (http://www.efdsw.navfac.navy.mil/05/05I/NMCI.htm. Appropriate NMCI subject matter experts are available from the NMCI Contractor to assist Department of the Navy (DoN) designers and planners upon request. Contact the base NMCI representative for the point of contact in the Base Area Network / Local Area Network (BAN/LAN) design team or the Regional Network and Communications Engineer (NCE) information is located on the EFDSOUTHWESTDIV website.

1-3 **Order of Precedence:** This UFC does not and cannot supersede or add to the requirements of the NMCI contract. If conflicts arise between this document and the NMCI contract, the NMCI contract governs.

This document has been developed by DoN and the NMCI contractor.

1-4 **ORDER OF PRESENTATION.** This document presents a summary of the requirements to prepare DoN space for a future NMCI installation in chapter 2. Chapters 3 and 4 provide information on how an existing base, or building, is converted to NMCI. Preparing for an NMCI seat is the goal. This document is not intended as a"cookbook" methodology for conversion, but only one way of getting there. DoN and the NMCI Contractor are committed to meeting the deployment objectives at least cost to both parties within the NMCI contract requirements.

1-5 **COORDINATION.** Although this criteria document was written to be as inclusive as possible, IT installations may vary greatly from building to building. It is therefore imperative that the government facilities team, facility designer, and construction contractor coordinate closely with the NMCI contactor at each stage of planning, design and construction. Please see the current MCON/MILCON NMCI guidance draft available at http://criteria.navfac.navy.mil and paragraphs 3-2.3 through 3-4.6 for additional information and detailed coordination requirements for the Naval Facilities Engineering Commands, ROICC offices, and Public Works Centers/Officers.

1-6 **APPLICATION.** This UFC covers DoN owned and leased (commercial and Inter- Agency Agreements) facilities regardless of location. For leased facilities, there will probably be additional approvals and may be additional criteria not covered in this instruction.

1-7 **REFERENCES.** Appendix A contains a complete list of references used in this manual. The publication date of the code or standard is not included in this document. In general, the latest available issuance of the reference has been used**.**

1-8 **GLOSSARY.** Acronyms, abbreviations and other uncommon terms are found in Appendix B. As a point of common usage, the acronym NMCI refers

to the network and EDS refers to the current NMCI Contractor or people who provide the network.

CHAPTER 2

GENERAL CONDITIONS NEW CONSTRUCTION

2-1 **GENERAL.** Quantity, size and location of NMCI infrastructure facilities are influenced by many factors. Required capabilities, quality of service, technical limitations, standards and codes are a few of the factors that impact the design and configuration of the required infrastructure. New construction covered by this chapter is defined as construction for the benefit of DoN, including new facilities, additions, or major renovations.

2-1.1 **Overview.** The NMCI unclassified design on any given base is a hierarchical, three layered architecture as indicated in Figure 2-1. The layers include:

- Core – connection to the outside world
- Distribution – building connection to base "outside plant"
- Access – drops to the individual seats

Connections between layers are fiber optic (Gigabit Ethernet). The connections between the access layer and the individual seats are Category 5e (Fast Ethernet) cable to support Fast Ethernet protocol. The terms used throughout this document follow ANSI / EIA / TIA standards to the greatest extent possible. Realizing that even the industry standards have inconsistencies as they progress through the differing update cycles, the most recent version of ANSI / EIA / TIA 568 B.1 has been chosen as the basis. When the terminology differs from this standard, the specific usage and interpretation of the terminology is described within the text and in Appendix B.

2-2 **CORE LAYER.** The Equipment Room (ER) that houses the NMCI network entrance facility (EF) is associated with the NMCI core layer and is called the NMCI Point of Presence (POP).

2-2.1 **Definition.** Every base with NMCI presence will have a POP (a base with a regional server farm will have the EF and other functions normally included in the POP, as described below, contained within the regional server farm.) A POP will be deployed within NMCI wherever the network is not physically controlled within a DoN environment. For example, at MCAS Miramar Interstate 15 divides East Miramar from "mainside". Communications connectivity between the two sides is primarily provided through PacBell central offices located off-site. Two NMCI POPs would be deployed to support this base: one aboard mainside, , and the other located aboard East Miramar.

Figure 2-1 – NMCI Network Architecture (Simplified)

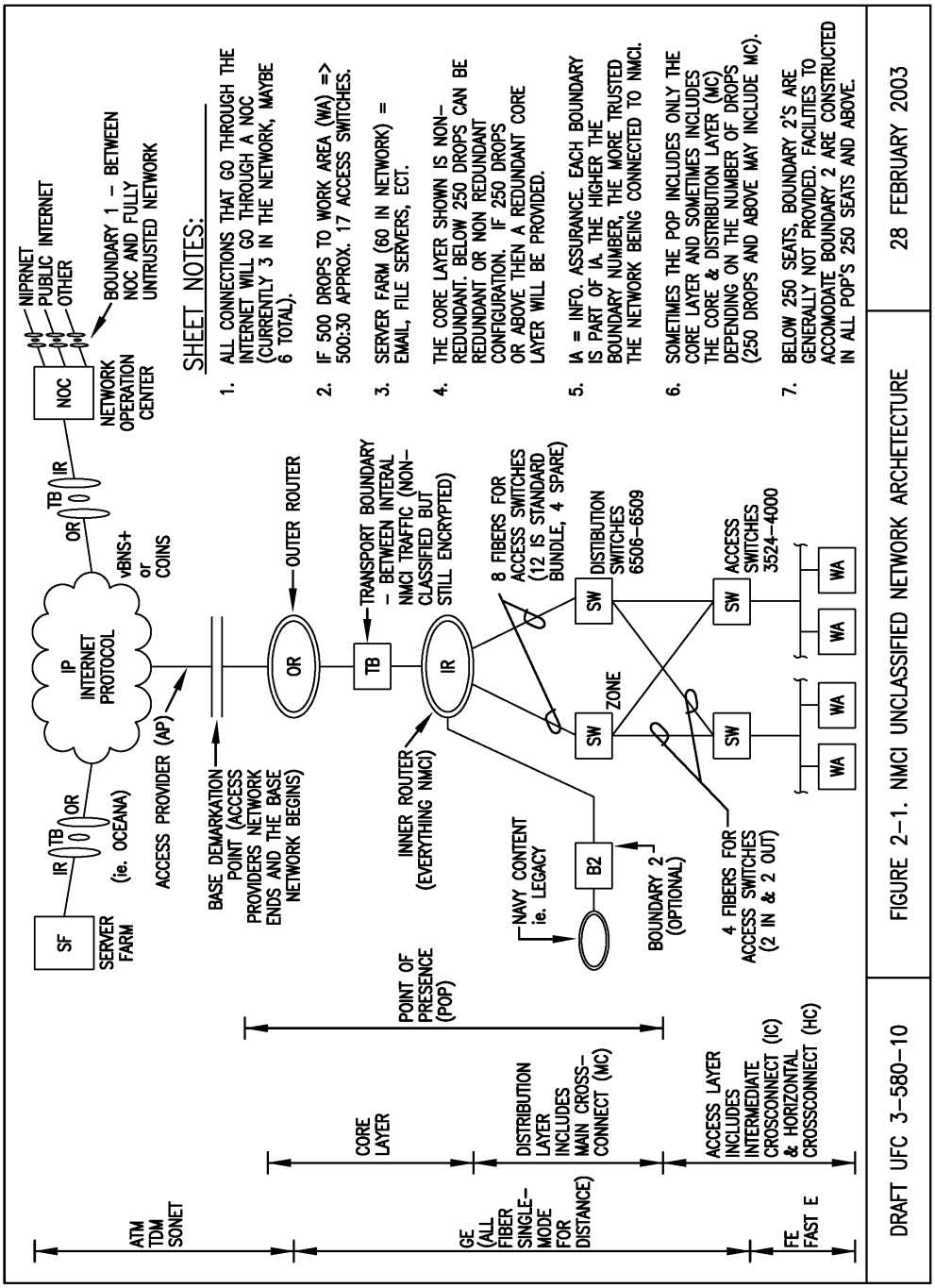

2-2.2 **Entrance Facility (EF).** Entrance Facilities denote the transfer of maintenance between the public network and the network under the control of NMCI. In new buildings, the NMCI function must be included in the overall telecommunications system EF design in accordance with MIL-HDBK 1012/3. In existing facilities the NMCI EF may or may not be located in proximity to the EF and demarcation point (DP) associated with the telecommunications access provider (AP), see Figure B-1. The EF function for the NMCI network is always contained within the NMCI POP or included in the Server Farm. The EF function of the POP provides media conversion between the access provider network and the NMCI network.

2-2.3 **Typical equipment.** An NMCI POP/ER contains some or all of the following classes of equipment, depending on site requirements.

- Unclassified inner router
- Outer router
- Transport boundary (for Information Assurance (IA))
- Communications line termination and multiplex equipment
- Network distribution routers
- Boundary 2 (for IA)
- Voice gateway equipment[1]
- Voice call management equipment[1]

The POP is not required to be a Controlled Access Area (CAA) as defined for a Protected Distribution System (PDS). There will not be any unencrypted classified traffic running through the POP. The Information Assurance (IA) for the unclassified network is provided by the Boundary 2 and Transport Boundary equipment.

2-2.4 **Typical Equipment Requirements.** Equipment will generally be contained in enclosed, lockable cabinets. Each cabinet will be secured to the structural flooring and braced in compliance with local codes. Smaller POPs will utilize an in-cabinet Uninterruptible Power System (UPS). POPs serving a base with more than 250 seats will utilize a common UPS for protected power. It is common for the NMCI Technical Power Panel (TPP) to be installed in the equipment room. NMCI typically does not install transformers or other electrical equipment within the POP/ER that would change the room type or affect the operation of the network equipment. New construction contracts must include

[1] May be installed at sites where voice CLINs have been ordered.

language within the contract documents that allows the NMCI contractor to install equipment prior to beneficial occupancy.

Equipment for the POP room is deployed in standard packages based on the number of seats. The equipment is typically delivered in enclosed cabinets 24-inches across the front face and 952.5 mm (37.5 in) in depth.

2-2.5 **Location.** The ideal location of the NMCI POP is near the base Telecommunications EF/DP. Typically, POPs should be located away from sources of electromagnetic interference (transformers, motors, x-ray, induction heaters, arc welders, radio, radar) such that interference is less than 3 V/m across the frequency spectrum. Generally, separate rooms with equipment located on opposing walls will satisfy this requirement.

Other locations to avoid are areas subject to flooding, as well as mailrooms and areas as defined in the antiterrorism/force protection (AT/FP) guidelines of UFC 4-010-01, *DoD Minimum Antiterrorism Standards for Buildings*.

2-2.6 **Size.** The nominal room space allocations for the NMCI POP facilities are as indicated in Table 2-1. This table has the requirement for data equipment only.

Communications cabinets require a minimum of 609.6 mm (24 in) of clearance to the front, rear and sides of the cabinet although 914.1 mm (36 in) is preferred. This space can be shared with work areas for nearby cabinets or electrical equipment. The Uniform Federal Accessibility Standards (UFAS) and Americans with Disabilities Act Accessibility Guidelines (ADAAG) requiring 914.1 mm (36 in) clearance between equipment in telecommunication rooms is excluded under Section 4.1.4, paragraph 4, “General Exceptions” in UFAS and under Section 4.1.1, paragraph 5 “General Exceptions” in the ADAAG. The National Electrical Code (NEC) requirement for 914.1 mm (36 in) of workspace for electrical junction points and pull boxes still applies.

Table 2-1 NMCI POP Facilities

Description**	Cabinets	Nominal Size *
Small Site (non-redundant) – 5 to 16 seats	1	3.7 m^2 (40 ft^2)
Small Site (redundant) – 5 to 16 seats	1	3.7 m^2 (40 ft^2)
Small Base (non-redundant) 17 to 249 seats	1	3.7 m^2 (40 ft^2)
Small Base (redundant) 17 to 249 seats	2	5.57 m^2 (60 ft^2)
Medium Base (redundant) – 250 to 450 seats	2	5.57 m^2 (60 ft^2)
Large Base (redundant); no server farm – 451 to 2000 seats	9	41.8 m^2 (450 ft^2)
Notes: * Indicates minimum clearances, see paragraph 2-2.6 for clarifications ** Redundant and non-redundant refer to inner and outer router in the POP.		

2-2.7 **Structural.** Equipment Room Structural Requirements are listed in Appendix C.

2-2.8 **Electrical.** POP electrical requirements are dependent upon the size of the POP. Table D-1 in Appendix D represents the NMCI electrical requirements for each size POP. The ampacity at the service connection point identified by the government for the TPP will be based upon the demand load of the equipment. Figure D-1, Appendix D, represents a typical one line for the POP equipment.

2-2.9 **Grounding.** Grounding requirements are listed in Appendix C.

2-2.10 **Mechanical.** Mechanical requirements are listed in Appendix C.

2-2.11 **Fire Protection.** Fire Protection guidelines for unoccupied telecommunications spaces will be in accordance with UFC 3-600-01, *Design:*

Fire Protection and Engineering for Facilities. These spaces are network distribution areas, are not considered "critical facilities", and are not required to comply with NFPA 75, *Standard for Protection of Information Technology Equipment* or NFPA 76, *Recommended Practice for Fire Protection of Telecommunications Facilities.* Regional server farms are the first level of infrastructure that are considered critical facilities by the NMCI Contractor (in concurrence with the NMCI Contract administrators), and therefore only the regional server farms and NOCs are required to comply with NFPA 75 *Standard for Protection of Information Technology Equipment*.

2-2.12 **Classified Network Requirements:** See Paragraph 2-7 for information.

2-3 **DISTRIBUTION LAYER.** The NMCI Distribution Layer consists of MC level switches that comprise a portion of the BAN and LAN. MC equipment requires permanent, dedicated space in EF's. These would include both the NMCI EF (the POP) as well as the EF for individual buildings as shown on Figure B-1. Guidelines for EF construction have been defined within the Core Layer information.

The space requirements for the NMCI MC facilities are as indicated in Table 2-2.

Table 2-2 NMCI MC Cabinet Requirements

Description	Cabinets	Nominal Size *
MC	1 or 2	3.72 to 5.57 m^2 (40 to 60 ft^2)
Notes: * See paragraph 2-2.6 for clarifications.		

2-4 **ACCESS LAYER.** The NMCI Access Layer consists of the IC level switches that comprise a portion of the BAN and LAN. IC equipment requires permanent, dedicated space. In Figure B-1 this equipment is located in an EF or ER. In normal NMCI configurations the IC equipment is typically located in a Telecommunications Room (TR). In smaller buildings, the functions of the EF and TR may be combined into a single room. Switches or routers and associated patch panels are included in cabinets.

2-4.1 **Telecommunication Rooms (TR).** Telecommunications rooms should be dedicated to telecommunications function and should not house unrelated electrical equipment. There must be at least one TR per floor. If the area served is over 929 m^2 (10,000 ft^2), there should be additional TRs on the floor . If the total cable distance to the work area (WA) is over 90 m (295 ft),

there must be additional TRs on the floor. All distances must be calculated in accordance with EIA / TIA 568-B.1.

Commonly, the NMCI TPP is installed in the TR. NMCI typically does not install transformers or other electrical equipment that would change the room type or effect the operation of the network equipment. Other equipment such as piping, ductwork or pneumatic tubing must not be installed in, pass through or enter into the room. For new facilities, the NMCI TR function must be combined with the overall telecommunication system room designs in accordance with MIL-HDBK 1012/3. New construction contracts must include language within the contract documents that allows the NMCI contractor to install equipment prior to beneficial occupancy.

2-4.2 **Location.** The ideal space for a typical TR will be near the building's EF for telecommunications infrastructure and must be within 90 m (295ft) of the seats/users to be served. This is cable distance and not physical separation on the floor. Telecommunication Rooms should be located away from sources of electromagnetic interference (transformers, motors, x-ray, induction heaters, arc welders, radio, radar) such that interference is less than 3 V/m across the frequency spectrum. Generally, separate rooms with equipment located on opposite walls will satisfy this requirement. Avoid areas subject to flooding.

- The TR must be located as close as practicable to the center of the area being served, and preferably in the core of the building.
- In multi-floor buildings, TRs must be stacked vertically

2-4.3 **Size of TRs.** Cabinets within TRs normally require a minimum of 609.6 mm (24 in) of clearance to the front and rear of the cabinet although 914.4 mm (36 in) is preferred. The Uniform Federal Accessibility Standards (UFAS) and Americans with Disabilities Act Accessibility Guidelines (ADAAG) requiring 914.1 mm (36 in) clearance between equipment in telecommunication rooms is excluded under Section 4.1.4, paragraph 4, "General Exceptions" in UFAS and under Section 4.1.1, paragraph 5 "General Exceptions" in the ADAAG. The NEC requirement for 914.4 mm (36 in) of workspace for electrical junction points and pull boxes still applies.

Size requirements for TRs are based on distributing telecommunications service to one individual work area per 9.29 m^2 (100 ft^2) of usable floor space. Minimum room sizes for TRs and the potential number of seats that can be addressed per the EIA / TIA guidelines are shown in Table 2-3.

Table 2-3 TR Size Requirements

Area Served	Room size[2]	Potential Seats Fed
464.5 m^2 (5000 ft^2) or less	3.05 m by 2.43 m (10 ft. by 8 ft)	50
464.5-743.2 m^2 (5000-8000 ft^2)	3.05 m by 2.74 m (10 ft. by 9 ft.)	50-80
743.2-929 m^2 (8000-10,000 ft^2)	3.05 m by 3.35 m (10 ft. by 11 ft.)	80-100

2-4.4 **Size of NMCI Equipment within TRs.** The nominal space required for NMCI IC equipment cabinets in TRs is indicated in Table 2-4. Cabinet requirements may vary due to seat count, seat classifications and other factors.

As an example, the space allocated to a wall mounted or floor mounted cabinet is shown in Figure 2-2.

Figure 2-2 Wall-Mounted or Floor mounted Cabinet

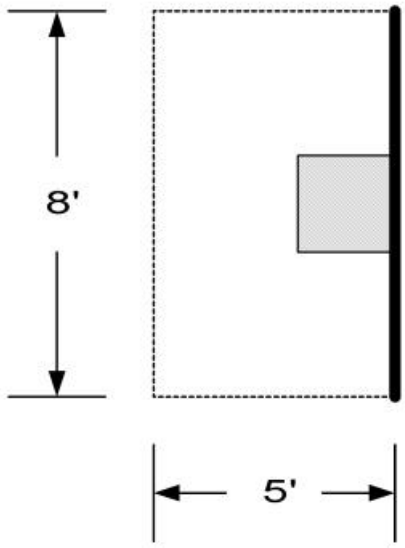

The workspace required around the cabinet is still required even if the cabinet is mounted 2m (6.5 ft) off the floor.

[2] ANSI/TIA/EIA-569-A recommends a minimum room size of 3.05 m x 0.65 m (10 ft x 7 ft.). The size 3.05 m by 0.74 m (10 ft x 8 ft) is specified here to allow a center rack configuration.

Table 2-4 NMCI TR Cabinet Requirements

Description	Cabinets	Nominal Size *
Large IC	2	5.57 m^2 (60 ft^2)
Typical IC	1	3.7 m^2 (40 ft^2)
Notes: * Indicates minimum requirements, see paragraph 2-2.6 for clarifications.		

2-4.5 **Structural.** Structural requirements are listed in Appendix C.

2-4.6 **Electrical.** TR electrical requirements are dependent upon the number of seats supported in addition to the basic requirements listed in ANSI/TIA/EIA 569A. Tables D-2 and D-3 in Appendix D represent the NMCI electrical requirements for each TR. The ampacity at the service connection point identified by the government for the TPP will be based upon the demand load of the equipment. Figure D-2, Appendix D, represents a typical one line for the MC / IC equipment in the TR.

2-4.7 **Grounding.** Grounding requirements are listed in Appendix C.

2-4.8 **Mechanical.** Mechanical requirements are listed in Appendix C.

2-4.9 **Fire Protection.** Fire Protection guidelines for unoccupied telecommunications spaces will be in accordance with UFC 3-600-01, *Design: Fire Protection and Engineering for Facilities.* These spaces are network distribution areas, are not considered "critical facilities", and are not required to comply with NFPA 75, *Standard for Protection of Information Technology Equipment* or NFPA 76, *Recommended Practice for Fire Protection of Telecommunications Facilities*. Regional server farms are the first level of infrastructure that are considered critical facilities by the NMCI Contractor (in concurrence with the NMCI Contract administrators), and therefore only the regional server farms and NOCs are required to comply with NFPA 75, *Standard for Protection of Information Technology Equipment*. TRs are therefore not normally required to be fire rated structures.

2-4.10 **Classified Network Requirements**: See Paragraph 2-7 for information.

2-5 **OUTSIDE CABLE PLANT.** For new construction where NMCI is not fully implemented (anticipated prior to FY-2004) at a given base, see Chapter

4. This section is therefore written describing the **post cutover** condition that NMCI is fully implemented as described in the conversion process in Chapter 3.

2-5.1 **Pathways.** Coordinate with the NMCI Contractor to determine if the NMCI pathways can be routed in the same ductbank with other communication conduits. If so, external conduits (beyond the five-foot line) and manholes are MCON/MILCON funded to the closest applicable manhole. Otherwise, identify the quantity and routing of NMCI pathways on contract documents as either "funded by others and constructed by MCON/MILCON" OR "Provided by another contract" or "Provided by NMCI (which will require a Contract Line Item Number (CLIN) to the NMCI contract and funding). The location of manholes and the necessary interconnecting support structures must be explicitly described and identified in the contract documents.

For new buildings, a minimum of one 101.6-mm (4-in) conduit must be provided for NMCI service. Provide two conduits for multi-story buildings. Three innerducts (two 38.1 mm (1.5 in) and one 25.4 mm (1 in)) are to be used in each conduit and a pull wire is to be placed inside each of the innerducts and the conduit. This is in addition to the conduits required for other communications services; i.e. telephone, cable television, fire alarm and intrusion detection.

2-5.1.1 **Detection**. Provide electronic detection for each pathway in accordance with the following:

- Detectable warning tape above the duct back must be used for new installations
- Permanent tracer wire must be used when pulling new cable in existing duct systems.

2-5.2 **Cabling**. Standard NMCI practice utilizes Single Mode (SM) fiber optic cable, with a minimum core size of 8 microns, as the transport medium between building EFs.

- Install fiber underground. Fiber may be direct buried or installed in conduit.
- A minimum of 12 strands of SM fiber is required; coordinate with the NMCI contractor for additional requirements. Provide fiber with facility contract.
- If classified seats are supported, conduits are required and must be encased in concrete. Comply with applicable Protected Distribution Systems (PDS) requirements, including NAVSO P-5239-22, *Protected Distribution (PDS) System Guidebook*.

2-6 **INSIDE CABLE PLANT.** For new construction where NMCI is not fully implemented (anticipated prior to FY-2004) at a given base, see Chapter 4. This section is therefore written describing the **post cutover** condition that NMCI is fully implemented as described in the conversion process in Chapter 3 and is summarized below:

- Cable pathways provided with facility contract.
- Outlet boxes provided with facility contract.
- Backbone cabling provided with Facility contract.
- Horizontal cabling (data and voice) provided with facility contract.
- Jacks with cover plates provided with facility contract.

2-6.1 **Pathways.** Coordinate with the NMCI Contractor to ensure the proper type and location of jacks. The location of pathways and the necessary interconnecting support structures must be explicitly described and identified in the contract documents. New construction contracts must include language within the contract documents that allows the NMCI contractor to install backbone and miscellaneous related equipment cabling prior to beneficial occupancy.

2-6.1.1 **Backbone Pathways.** For new facilities include a minimum of one, dedicated 101.6 mm (4-in) conduit (or equivalent accessible pathway) from the ER to the TR and between TRs inside a building for NMCI use. These will provide path and protection for the second level backbone cable. When conduit is used, provide three innerducts (two 38.1 mm (1.5 in) and one 25.4 mm (1 in) within the dedicated conduits. Plenum rated innerducts must be provided as required by code and authority having jurisdiction. Provide a pull wire inside each of the innerducts and the conduit.

2-6.1.2 **Horizontal Pathways**. Horizontal pathways extend between the TR and the work area. Varieties of pathway options are available. The pathway system must be included in the project design (or RFP in case of Design/Build). The facilities contract must include all identified concealed conduits, conduit drop, cable tray, J-hook construction, outlet boxes, and pull wires in each conduit. Construction coordination with the NMCI Contractor must be a requirement of the contract. Access must be available to all pathways for the installation of additional cabling over the life of the building.

A common pathway approach utilizes complete conduit home runs from the WA to the TR. Cable trays, when used, must be sized per ANSI/TIA/EIA 569A. Where conduit is utilized, a minimum of one 1-inch conduit per drop must be stubbed up in the ceiling. Another pathway option for unclassified services consists of cable run from the TR along cable tray and J-

hooks suspended above a plenum ceiling, using the “streets and alleys” design approach, dropping through interior walls or support columns in conduit, and terminating at the wall outlet

2-6.2 **Cable**

2-6.2.1 **Backbone Cable.** Backbone cable will normally be fiber. On bases with low capacity POP equipment (less than 50 seats), copper interconnect cabling may be used between the ER and TR. Coordinate backbone requirements with NMCI contractor. Add additional backbone as required to support legacy networks.

2-6.2.2 **Horizontal Cable**. Home run cabling from each WA to the nearest telecommunications room will be Category 5e UTP cable. Network drops are terminated on eight-position 8-conductor Category 5e jacks, wired to the T568A configuration. Plenum rated cable must be provided as required by code and authority having jurisdiction.

2-6.3 **Jacks and Cover Plates**. Standard practice for work area (WA) outlets will be a 1 Voice + 1 Data (1V+1D) configuration contained in a single quad-4 position faceplate or wall plate. A typical wall plate configuration is shown in Figure 2-3. Positions 2 and 4 should be covered with blanks. Provide additional data outlet to support legacy or special voice and data systems when required.

Voice jacks will be home run to and terminated in the same wiring closet as the data drops. The voice drops and data drops will be CAT 5e UTP cable.

2-6.3.1 **Fiber to the Desktop.** If mission requirements for the work area include data rates above Category 5e (100 Base T), specific security requirements, or specific environmental constraints, then fiber optic cable to the desktop may be supported. The specific requirements must be authorized and must be identified by individual line items in the EFD 1391. A fiber optic home run is not supported by the standard NMCI contract seat. If fiber to the desktop is required, the NMCI monthly seat cost may therefore be significantly higher and would need to be identified under a separate NMCI CLIN.

Figure 2-3 Typical 1V+1D Wall Plate Configuration

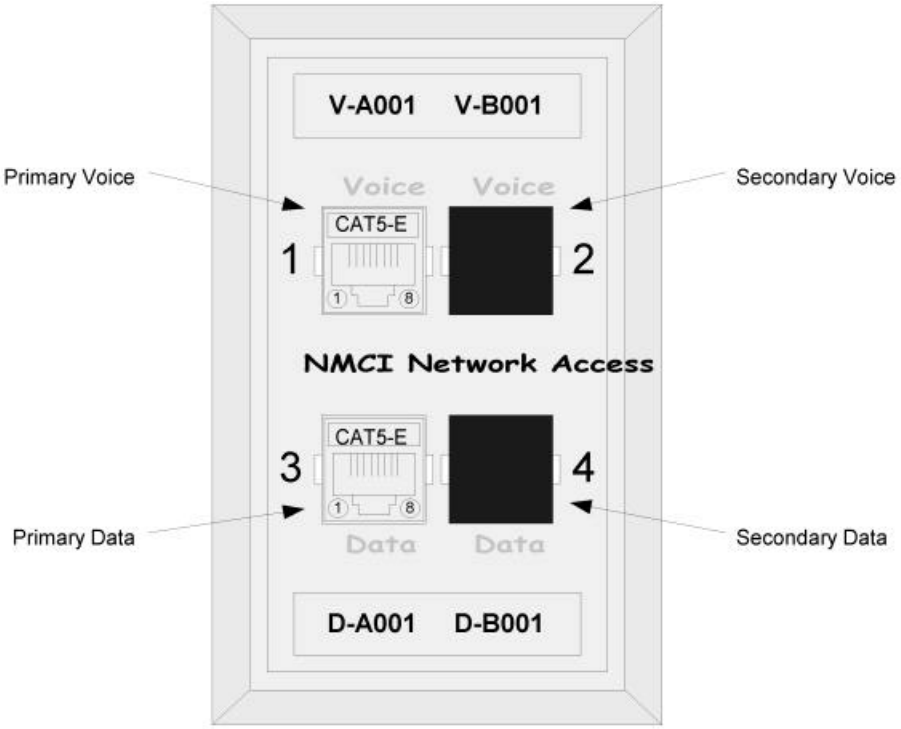

2-6.3.2 **Category 6 (CAT 6) Cabling.** Category 6 cable has recently been approved in EIA /TIA 568 B.2-1 (June 2002). Analogous to fiber optic, CAT 6 is not supported under the current NMCI contract. At this time it is not known if there will be additional costs associated with CAT 6 cable and therefore, the DoN has not yet converted to CAT 6.

2-6.4 **Interference Considerations**. Article 800.52 of the National Electrical Code states that communications wires and cables must be separated by at least 50.8 mm (2 in) from conductors of any light, power, Class 1, non-power-limited fire alarm, or medium power network-powered broadband communications circuits. When wires are run for any significant distance in an electromagnetic field, interference can occur between the field and the signals on the wires due to magnetic induction of the cable. Strong electromagnetic interference, especially when caused by lightning or radio transmitters, can destroy the signal drivers and receivers in the server, and can even create an electrical hazard by conducting power surges through lines and into equipment. NMCI minimum requirements for cable separation are:

- Horizontal wiring must not be run closer than 50.8 mm (2 in) in parallel with electrical wiring or lighting fixtures.

- Horizontal wiring must be placed no closer than 1.2 m (48 in) to electrical transformers

- Horizontal wiring must be placed no closer than 203.2 mm (8 in) to fluorescent lighting ballasts

- Horizontal wiring must be placed no closer than 76.2 mm (3 in) to other horizontal wiring when crossing

- Crossing of horizontal wiring should be at 90-degree angles

2-6.5 **Penetrations.** Raceways, cable trays, and cables for power, data, and communications systems penetrating non-rated and fire-rated floors, walls, and other partitions of building construction must be fire stopped. Fire stopping must be accomplished by using a combination of Underwriters Laboratories (UL) listed materials and devices, including penetrating raceway, cable tray, or cables, required to make a complete fire stop. See UFGS 07840, *Firestopping* for additional information on listed materials. Verify that cabling and other penetrating elements and supporting devices have been completely installed and temporary lines and cables have been removed.

2-7 Classified Network Requirements. Protected Distributed Systems (PDS) are used to protect the transmission of unencrypted classified information such as the Secret Internet Protocol Router Network (SIPRNET). When required, provide a PDS in accordance with Appendix E.

.

CHAPTER 3

NMCI CONVERSION PROCESS

3-1 **NMCI Conversion Process.** This chapter contains an overview, in a template format, of the process associated with a base conversion. It is not within the scope of this UFC to provide details on the various processes. Furthermore, the NMCI Contractor is continually refining its processes and a detailed representation would quickly go out of date and create confusion among users of this UFC. There are agreed-to cutover plans between DoN and the NMCI Contractor for each base. In order to meet these schedules, the NMCI Contractor may elect to accelerate certain portions of the construction or modify steps in the process given herein to meet these schedules. There is no obligation expressed or implied by the NMCI Contractor or the government that these processes will be rigidly observed at all times and in all cases. Ongoing communication between the NMCI Contractor and the base personnel may require additional meetings and some deviations to the process framework provided herein. Additional documentation on these processes is available from the NMCI Contractor.

It is also important to note that the processes briefly described in this chapter apply only to the infrastructure work. There are other simultaneous processes affecting such things as legacy applications and seat rolls. Such items are beyond the scope of this UFC.

3-2 **Overview**. NMCI facilities are constructed to commercial "best practices." Construction is not required to conform to the standard Military Handbooks, Unified Facilities Criteria (UFC), or Unified Facilities Guide Specifications (UFGS). However, the requirements for Life Safety and Fire Protection must comply with MIL-HDBK-1008C, *Fire Protection for Facilities Engineering, Design, and Construction*. The NMCI Contractor is also required to follow standards identified in the ADAAG/UFAS and Life, Fire, and Safety regulations.

Note: Although the UFC 3-600-01, Design: *Fire Protection Engineering for Facilities* is the latest criteria, the NMCI contractor is only required to comply with MIL-HDBK-1008C, *Fire Protection for Facilities Engineering, Design, and Construction*, which was the ruling criteria at NMCI contract award.

3-2.1 **Material Support.** The Government is contractually bound to provide government furnished equipment (GFE) and government furnished facilities (GFF) to the NMCI Contractor to support the build-out of the NMCI Contractor infrastructure. Detailed information on roles and responsibilities during construction are provided in the NMCI Operations Manual at the EFDSOUTHWESTDIV website:
http://www.efdsw.navfac.navy.mil/05/05I/NMCI.HTM

In general terms under the agreement, the Government provides:

- Net area requested, when possible;
- Server farms, network operation centers, administration, and warehouse spaces that are fully or partially remediated of hazards from asbestos and lead-based paint as necessary to ensure a safe working environment. For points of presence, communications closets, and cable plant installation, the contractor is responsible for Class III and Class IV asbestos and paint with lead work on a reimbursable basis. The government is responsible for any other remediation in these areas.
- Adequate floor loading capacity in accordance with Appendix C, Structural;
- Heating and ventilation, and air conditioning if available;
- Adequate electrical power;
- Building and utility drawings of record;
- Code compliance review;
- Base security;
- Security badges for contractor personnel constructing facilities and security escorts into areas where contractor personnel are not normally cleared for access. Lists must be provided in advance by the NMCI contractor for access.

Note: Conflicts with requirements will be negotiated on a case-by-case basis.

3-2.2 **Coordination.** The NAVFACENGCOM NMCI GFF management office at SOUTHWESTDIV is the Government coordination point on the NMCI program for all facilities issues. Questions regarding Chapters 3 and 4 of this Guidance should be directed to that office at www.efdsw.navfac.navy.mil/05/05I/nmci.htm.

3-2.3 **Planned Construction.** For DoN construction projects that are being planned or under construction, the NMCI Contractor and DoN will work together to identify possible pre-construction design changes to facilitate compliance with NMCI cabling/voice/data standards. The NMCI Contractor site manager needs to obtain a list of new building projects being planned or under construction from the Base representative during the conversion process. The NMCI Contractor representative will coordinate an NMCI Contractor review in order to provide guidance on recommended design changes.

3-2.4 **Navy Facilities Engineering Commands.** Navy Facilities Engineering Commands (NAVFACENGCOM), through respective engineering field divisions/activities, will provide:

- Review of the NMCI Contractor Build-out design, focusing on fire protection, life safety and environmental
- Review of the NMCI Contractor's fire protection shop drawings.
- Final Acceptance of newly installed or modified fire suppression systems.
- Review of special site-specific engineering reports provided by the NMCI Contractor.

3-2.5 **ROICC.** NAVFACENGCOM Resident Officer in Charge of Construction (ROICC) will provide the following support for Navy and Marine Corps Activities:

- Coordination of the government review of the NMCI Contractor Build-out design including the receipt and distribution of designs between all involved parties.
- Limited construction start-up coordination and assistance similar to what is provided for new construction projects, including pre-construction conferences, utility outages, dig permits, security passes, and lay-down areas.
- Visits to the job site, as appropriate, to gain a perspective for jobsite safety and reasonable assurance that construction complies with the design. The ROICC has the authority to suspend work when life-threatening safety violations or practices are observed.
- Liaison and assistance with other station departments (i.e. public works, security, environmental, and fire department) as required to maintain construction progress.
- Coordination and interface with other construction contracts in vicinity of the NMCI Construction.
- Coordination with the NMCI GFF manager's office at SOUTHWESTNAVFACENGCOM.

3-2.6 **Public Works.** In addition to the ROICC responsibilities for all projects as identified above, Public Works will provide support including:

- Utility connection and interface, design review and coordination, and support on utility outages and connections.

- Input to the Site Concurrence Memorandum (SCM) concerning utilities and equipment maintenance and coordination with ISF.

- Other support as requested.

Public Works is defined as Public Works Centers (PWC) (when site is covered by PWC area of responsibility and when funded by regional commanders or major claimants) or as Public Works Departments (PWD) / Facilities Management Departments (FMD) / Public Works Offices (PWO).

3-2.7 **USMC G6.** The base G6 should be involved in all phases of the pre-con. While PWD issues the digging permits on USMC bases, only the Base G6 locates, installs and removes cables on base as well as develops building EFs and TRs:

- Input to the Site Concurrence Memorandum (SCM) concerning utilities and equipment maintenance and coordination with NMCI Contractor.

3-3 **PHASE 1 – PREPARATION.** The initial introduction meetings between the NMCI Contractor and the chain of command are conducted prior to this preparation phase. As a part of these preparations, the NMCI Contractor sends a letter to the base Commanding Officer (CO) stating that seats have been requested on a delivery order. The NMCI Contractor BAN / LAN team will arrive on site and begin collecting the data needed for the conversion. While the NMCI Contractor begins to mobilize, the CO should instruct the Public Works Department or the ROICC to make available to the NMCI Contractor Site Manager, existing drawings and diagrams detailing electrical distribution and communications cabling throughout the base. These documents should be in Computer Aided Design, Drafting (CADD) format where available.

3-3.1 **BAN / LAN Implementation Team.** A BAN / LAN team is responsible for identifying and dedicating infrastructure components to the NMCI Contractor including available conduits, fiber, and copper cable. This infrastructure includes currently operating network as well as dark fiber, copper, and conduits that may be turned over to the NMCI Contractor for their use.. A regional NMCI Coordinator must be identified to facilitate the entire implementation process. The team consists of the following roles and organizations:

- NMCI Coordinator (a senior DoN representative).

- PWC / PWD / FMD / PWO.

- Building Managers: Public Works should designate a building liaison for each building so that multiple users and the NMCI Contractor team can coordinate early on various facilities issues.

- NAVNETWARCOM (NCTC / NNSOC) / Base Communications Officer (BCO) / USMC G6.

- Space and Naval Warfare Systems Command (SPAWAR) (where applicable).

- Region / Claimant / Activity IT leads / Chief Information Officer (CIO).

- ROICC.

- NMCI Contractor.

3-3.2 **Preliminary Site Questionnaire.** The Preliminary Site Questionnaire (PSQ), http://www.nmci-isf.com/transition.htm - PSQ is normally used as a tool for seat conversion, however portions of it are also applicable to the infrastructure conversion. It is a prerequisite for conducting the Joint Assessment/Survey (Paragraph 3-4). It is requested that the PSQ be completed by the claimant prior to the in-brief and contains information such as:

- Points of Contact.

- Copies of Drawings (hard and electronic if available).

- Known Constraints.

- Known Issues.

3-3.3 **Site In-Brief.** Phase 1 ends with an on-site in-brief. The purpose of the in-brief is to explain the full NMCI conversion process. Participants in the in-brief generally include:

- 3-3.3.1 **NMCI Contractor**

- Site Manager.

- Claimant Manager.

- Network and Communications Engineer.

3-3.3.2 **DoN**

- Command Representative.

- Base Command (Infrastructure/Technology) / USMC G6.
- Public Works.
- ROICC.
- Base Communications Officer (BCO).
- Major Claimants in the current delivery order.

3-3.4 **Initial Facilities Briefing.** Because the formal site in-brief is focused on the entire NMCI deliverable, it is not possible to focus on the infrastructure work as part of the brief. At some sites, the morning is set aside for the general briefing and "break out" sessions are held with various base parties, such as the Public Works or ROICC during the afternoon. On some bases, these meetings are on different days. The following topics are covered:

- The infrastructure conversion (design and discovery) process.
- Typical documentation packages.
- Guidance on reviews and the two planned pre-construction (PRECON) meetings.
- The need for escorts and support during the survey and build phases.
- Safety Plan.
- Construction standards and best commercial practice.
- Local work rules, hours.
- Local zoning or code restraints.
- Environmental concerns: Such as Asbestos, Lead-Based Paint, State Historic Preservation Offices, Natural/Cultural Resources.
- Building access requirements: Such as secure/un-secure buildings, escort requirements.
- Electrical loading.
- POP location and requirements (where applicable).

3-4 **PHASE 2 -- JOINT ASSESSMENT/SURVEY.** The joint assessment or survey is a discovery process performed by NMCI Contractor with representation from the Navy, to identify specific information within buildings that

are to have an NMCI presence and the infrastructure required to support those seats. This step is a more detailed physical design of the network elements, including inside plant and TR spaces, followed by review and verification. This physical design provides the basis for the first PRECON meeting. This typically includes:

- General infrastructure related measurements such as building distances.
- Identification of rooms and interior runs.
- Identification of construction requirements.
- Information Assurance high level survey.

3-4.1 **High Level Design.** The high level design will be completed 15 working days following the Joint Assessment/Survey. It is an internal NMCI Contractor program document package. This design will include preliminary network topology, identification of closets, switches, and potential reuse of inside and outside cable plant. It can be considered the equivalent of a 30% design.

3-4.2 **PRECON Meeting 1.** A PRECON meeting will be conducted following the preparation of NMCI Contractor high-level design to achieve consensus on the design elements with cognizant NMCI Contractor, ROICC, USMC G6 and Public Works personnel. Formal construction drawings are not prepared for this meeting by the NMCI Contractor. This meeting may proceed or follow the internal NMCI Contractor high-level design briefings. Items to be discussed will include:

- Buildings/closets that will receive equipment.
- Room selection criteria and priorities.
- Outside Plant (OSP) and Inside Plant (ISP).
- Expected type of build-out.
- IA requirements.
- Buildings scheduled for demolition.
- Safety and accident reporting.
- Hazardous materials issues.
- Existing base construction plans that could impact NMCI Contractor work.

- Support required for detailed surveys.

3-5 **PHASE 3 – DETAILED SURVEY AND DESIGN.** The third phase is a detailed survey of all facilities in the claimant's current order. This includes physically visiting each area to validate or resolve any issues that may impact installation of NMCI Infrastructure.

3-5.1 **Team.** The NMCI Contractor's sub-contractors generally conduct the detailed surveys with the base's Public Works Department. It is vital that Public Works have representation on this survey to identify and dedicate the required assets including space in the electrical panel and room availability.

3-5.2 **Detailed Survey.** Using the High Level Design, the NMCI Contractor will physically visit each affected portion of the facility to determine:

- Power available.
- Identify power panels to be used.
- Identify and measure space.
- Condition of facility.
- Buildings/closets that will receive equipment.
- Expected type of build-out.
- Electrical requirements.
- HVAC requirements.
- Space requirements.
- Environmental concerns: Such as Asbestos, Lead-Based Paint, State Historic Preservation Offices, Natural/Cultural Resources.
- ISP/OSP testing and measurement.
- Telecommunications Room/Work Area measurements.
- Life safety and fire protection requirements.
- Seat locations.

3-5.3 **Detailed Design.** The result of the detailed survey will be a detailed design consisting of 80% to 100% construction drawings as well as detailed information on all aspects of the infrastructure build-out. The detailed design will include:

- Detailed design and construction drawings for inside and outside plant.
- The complete logical network design also called the Base Implementation Plan.
- Construction drawings and floor plans for each affected room.

The detailed design is an internal NMCI Contractor documentation package, which is reviewed for completeness and accuracy. It provides the information for the follow-on command briefings that occur prior to seat roll.

3-5.4 **PRECON Meeting 2.** A second PRECON meeting will be held to review the construction aspects of the detailed design. This meeting is to solicit input from the Command on health and safety issues, compatibility with existing facilities, adherence to good commercial practice, communications security and other security criteria and to insure that the on base parties are informed on all aspects of the design. A technical review of the NMCI contractor's design is not the responsibility of the Government, except for life safety and fire protection requirements. Therefore, most design decisions will be the responsibility of the NMCI Contractor. Included in the discussion will be timelines, roles and responsibilities, work required, scheduling of fire protection submittals, and permitting.

3-6 **PHASE 4 – IMPLEMENTATION.** Due to seat rollout schedules, some aspects of the construction may begin earlier in the process. Additional PRECON meetings may be required to insure that all parties are properly informed of the work being performed. Production meetings between ROICC, PW, and the NMCI Contractor must be held on a regular basis; initially, once a week.

Construction will be performed in zones or in phases to accommodate other base work that is on going or to insure that the seat rolls begin on time. During the construction process, changes will be noted only as redlines to the detailed design drawings.

3-7 **PHASE 5 – COMPLETION**

3-7.1 **NMCI Assumption of Responsibility.** During the implementation of the infrastructure to support the NMCI conversion, the NMCI Contractor will assume responsibility for the existing or "legacy" network. This point is defined under the NMCI contract as the assumption of responsibility or AOR. This action gives the NMCI Contractor both the responsibility for the maintenance and performance of the legacy network as well as the authority to direct changes in the legacy network configuration. Some legacy networks will be retained by the activity and not maintained by NMCI.

3-7.2 **NMCI Cutover.** When a seat has been brought into compliance with NMCI standards, generally defined as the computer having been replaced and the new computer connected to the NMCI network (and has been in compliance with NMCI standards for a minimum period of 30 days), it is said to have been cutover. The cutover period begins when the first seat rolls and ends when the last seat has been converted. For the purposes of this guidance, the network has been "cutover" after the last seat has been converted.

3-7.3 **Documentation.** After work is completed, as-built drawings in electronic format compatible with the latest version of AutoCAD will be issued to reflect the actual conditions. Hard copies of the as-builts of the completed work will be delivered to the PWO/PWC/FMD with soft copies to SOUTHWESTNAVFACENGCOM.

CHAPTER 4

SPECIAL CONSIDERATIONS DURING THE CONVERSION PROCESS

4-1 BUILDING POWER

4-1.1 **Service Provision.** The government is responsible for providing required electrical service to the building to support NMCI operations within that building. As part of the detailed site survey, DoN and the NMCI Contractor will survey all buildings to determine if additional electrical service is required.

4-1.2 **Building Distribution.** The feeder breaker for the POP will be sized according to equipment load in Table D-1. For an MC, the feeder breaker will be sized according to Table D-2. For an IC, the feeder breaker will be sized according to Table D-3. The feeder breaker (if existing) or adequate usable space will be provided by DoN in the panel it designates for this purpose. A dedicated technical power panel (TPP) may be provided by the NMCI Contractor to feed the NMCI equipment. Interconnection conduit and cabling between the feeder panel and NMCI Contractor TPP will be provided by the NMCI Contractor.

4-2 **MECHANICAL.** If NMCI equipment is added to an existing room and the heat load from the equipment exceeds the ability of existing HVAC to provide adequate cooling for that space, ISF will provide additional means for cooling that space. The power to the additional HVAC equipment will be included in the total ampacity identified by the NMCI building space request and should be consistent with the site cooling amps information in Appendix D. It will be provided from the TPP by NMCI.

4-2.1 **Existing HVAC.** If a space is shared or utilizes building-wide HVAC, the NMCI Contractor will provide controls if required to be able to adjust ventilation and temperature within the NMCI space. Independent ventilation control is desirable. The NMCI Contractor is responsible for cooling solutions in situations where the entire building HVAC system shut down may result in inadequate cooling in the NMCI equipment space.

4-2.2 **Cooling Guidelines.** A cooling/ventilation solution will be designed and provided by the NMCI Contractor to accommodate the loads identified in Appendix D.

4-3 OUTSIDE CABLE PLANT

4-3.1 **Existing Infrastructure.** Existing pathways and cabling will be leveraged as the first option for the NMCI outside plant (OSP). The BAN / LAN implementation will control this process. Existing IT cable and pathways become the property of the NMCI Contractor at AOR. The NMCI Contractor may conduct an assessment of existing non-IT OSP pathways and cables and provide a written request to the customer for transfer of desirable infrastructure as early as

possible in the program. The station can transfer or share non-IT infrastructure to the NMCI Contractor via a DD Form 1149 (for an example of a completed DD Form 1149, see SOUTHWESTDIV web site in paragraph 1-2) if the infrastructure is available after anticipated Government requirements have been accounted for. When NMCI does not AOR all strands in an existing F.O. cable, procedures have been established relating to government and contractor responsibilities. These procedures are available in Decision Papers on the SOUTHWESTDIV Website.

4-3.2 **Fiber Routing.** NMCI practice is that all fiber will be underground. Aerial fiber is only permitted if it already exists and diverse redundant fiber is buried, or available via a different aerial path. Permission for NMCI Contractor to run aerial fiber must be obtained from the cognizant activities Base Communications Office. If new trenching of pathways is required, a minimum of one 101.6 mm (4 in) PVC conduit will be placed by the NMCI Contractor. In multi-story building locations, two 101.6 mm (4 in) conduits will be placed**.** Three innerducts (two 38.1 mm (1.5 in) and one 25.4 mm (1 in)) will be used in each conduit and a pull wire is to be placed inside each innerduct and conduit.

The NMCI architecture dictates that each access switch has two links to the distribution layer. Diverse routing will be used whenever practical as defined by the operating guidelines of the NMCI Contractor. In order to comply with the NMCI performance requirements, buildings with several hundred users that would be affected in an outage, may dictate diverse fiber runs. However, it may not make good business sense to add diverse fiber paths to access all buildings. Dual-fiber runs may also be placed in the same conduit to provide some level of redundancy in the switch.

4-4 INSIDE CABLE PLANT

4-4.1 **Existing Building.** Existing horizontal pathways and work area cabling will be leveraged as the first option for all NMCI inside plant (ISP). If the existing cable plant is sufficient to support the needed uplinks or interconnects, and will scale for future needs, it will be certified by ISF and reused. If the cable plant is determined to be insufficient, new cable must be pulled. Normally, existing Category 5e cable will be AOR'd if it has been certified by ISF to meet the data transmission standards for the cable. In the case where there is only fiber optic cabling between the IC and WA, the NMCI Contractor will certify the cable and reuse it. See paragraph 2-6.3.1 for additional information on fiber to the desktop. Where there are both fiber optic and Category 5e cables, the NMCI Contractor will utilize only the Category 5e cables, where such cables can be certified for use, and abandon the fiber optic cabling in place.

4-4.2 **Wall Jacks and Cable.** Minimum acceptable wall outlet configuration for NMCI AOR is 1 Voice and 1 Data (1V + 1D) jack in a single, 4-position faceplate. This is also the standard configuration for new DoN construction. The 1V+1D configuration should be installed and labeled in positions 1 and 3 on the wall outlet as shown in Figure 2-3. Positions 2 and 4

should be covered with blanks. Both voice and data ports are to be combined into a single wall outlet with one wall outlet per work area (WA).

Voice jacks must be home run back to the appropriate telephone closet in existing buildings or telecommunications room in new facilities. The voice drops and data drops must also be CAT 5e UTP cable.

4-4.3 **New Construction.** This paragraph deals with a new facility being constructed where the NMCI Contractor has begun to assume the network for that activity. Other activities on the same base may not have authorized seats at the same time. Both voice and data drops are included in horizontal cabling. The following guidance is based on the design completion date and is relevant to the tenant command.

4-4.3.1 **Prior to NMCI Seat Authorization.**

- Cable pathways provided with Facility Contract.
- Outlet boxes provided with Facility Contract.
- Backbone cabling provided with Facility Contract.
- Horizontal cabling (data and voice) provided with Facility Contract.
- Jacks with cover plates provided with Facility Contract.

4-4.3.2 **Subsequent to Seat Authorization.** After authorization, new construction contracts must include language within the contract documents that allows the NMCI contractor to install equipment and cabling prior to beneficial occupancy.

- Cable pathways provided with Facility Contract.
- Outlet boxes provided with Facility Contract.
- Backbone cabling provided by NMCI.
- Horizontal cabling (data and voice) provided with Facility Contract.
- Jacks with cover plates provided with Facility Contract.

4-5 INTERIOR FACILITIES

4-5.1 **POP Equipment.** The floor space required for POP equipment on conversion will be the same as the recommendations for new construction in paragraph 2-2.6.

4-5.2 **Access and Distribution Equipment.** Access and distribution layer equipment is generally located in existing closets/rooms or in open spaces without separating walls. The NMCI Contractor will, as a last resort, partition a room to meet specific security or minimize cooling requirements. Floor space requirements for conversion depend on site conditions where the equipment is to be located and the equipment required. They will be generally the same as for new construction in paragraphs 2-4.3 and 2-4.4.

4-5.3 **Secure Areas.** For existing facilities, the NMCI contractor has the responsibility to harden a new NMCI space (that will receive classified COMSEC equipment for NMCI use) to meet existing security regulations. However, if the contractor is taking over an existing closet already containing government classified equipment, it is the government's responsibility to harden the closet since it should have met security requirements before the contractor added their equipment and/or took over the existing equipment. The use of space in an existing facility that does not meet the standards outlined in the security requirements documents for the associated level of security is not permitted.

Contractor provided PDS conduits will generally be installed below the ceiling tiles unless an exception is requested by the activity. When installation of conduit above the drop ceiling is approved, the government will provide clear panels in order to view the conduits. The clear panels must meet fire protection flame spread rating for the space affected. The government will install the tiles if they are not available in time for contractor installation.

4-5.4 **FIRE PROTECTION.** Fire Protection for existing spaces that are being modified by the NMCI Contractor to be unoccupied telecommunications spaces, must be provided in accordance with MIL-HDBK-1008C, *Fire Protection for Facilities Engineering, Design, and Construction*.

Note: Although the UFC 3-600-01, *Design: Fire Protection Engineering for Facilities* is the latest criteria, the NMCI contractor is only required to comply with MIL-HDBK-1008C, *Fire Protection for Facilities Engineering, Design, and Construction*, which was the ruling criteria at NMCI contract award.

Due to the function of the spaces, it is NMCI practice to construct the EFs and TRs as 1-hour, fire rated enclosures. If the facilities that these spaces are in are provided with sprinkler protection, then the EF and TR must have sprinkler protection. These spaces are network distribution areas, are not considered "critical facilities", and are not required to comply with NFPA 75, *Standard for Protection of Information Technology Equipment* or NFPA 76, *Recommended Practice for Fire Protection of Telecommunications Facilities*. Server farms are the first level of infrastructure that are considered critical facilities by the NMCI Contractor (in concurrence with the NMCI Contract administrators), and therefore only the server farms and NOCs are required to

comply with NFPA 75, *Standard for Protection of Information Technology Equipment*.

In EFs, a wall mounted Type 2AC rated fire extinguisher will generally be installed by the NMCI contractor inside the EF door and with signage for easy access. The 1-hour rating on the EF is due to the function of the EF, not the equipment located inside.

APPENDIX A

REFERENCES

GOVERNMENT PUBLICATIONS

1. Unified Facilities Criteria	UFC 4-010-01, DoD Minimum Antiterrorism Standards for Buildings
National Institute of Building Sciences USACE / NAVFAC / AFCESA Construction Criteria Base www.ccb.org	UFGS 07840N, Firestopping MIL-HDBK-1002/2A, Structural Loads* This handbook is referenced only for tables that will be incorporated in the Military Handbook 1012/3
2. Naval Facilities Engineering Command (NAVFAC)	ITG FY , Telecommunications Systems
Engineering Innovation and Criteria Office (EICO) 1510 Gilbert Street Norfolk, VA 23511 www.lantdiv.navfac.navy.mil	UFC 3-600-01, Design: Fire Protection Engineering for Facilities MIL-HDBK-1008C, Fire Protection For Facility Engineering, Design and Construction.
3. National Archives and Records Administration (NARA)	
700 Pennsylvania Ave, N.W. Washington, D.C. 20408 1-866-325-7208 http://www.access-board.gov/adaag/html/adaag.htm	Americans with Disabilities Act Accessibility Guidelines (ADAAG)
http://www.access-board.gov/ufas/ufas-html/ufas.htm	Uniform Federal Accessibility Standards (UFAS)
Chief of Naval Operations http://infosec.navy.mil	NAVSO P-5239-22,

NON-GOVERNMENT PUBLICATIONS

1. ASHRAE American Society of Heating, Refrigerating and Air-Conditioning Engineers, Inc. 1791 Tullie Circle, N.E., Atlanta, GA 30329 USA Phone: (404)636-8400 Fax: (404)321-5478 www.ahrae.org	ASHRAE Standard 62, Ventilation for Acceptable Indoor Air Quality
2. ANSI/TIA/EIA American National Standards Institute Washington, DC Headquarters 1819 L Street, NW, 6th Fl. Washington, DC, 20036 Tel: 202.293.8020 Fax:202.293.9287 www.ansi.org	ANSI / TIA / EIA 568-B.1, Commercial Building Telecommunications Cabling Standard (with Appendices 1, 2, and 3) ANSI / TIA / EIA 569-A, Commercial Building Standard for Telecommunications Pathways and Spaces ANSI /NECA/ BICSI 568, Standard for Installing Commercial Building Telecommunications Cabling ANSI / TIA / EIA 606, The Administration Standard for the Telecommunications Infrastructure of Commercial Buildings TIA-J-STD -607, Commercial Building Bond and Grounding Requirements for Telecommunications ANSI /TIA /EIA 645, Information Technology Equipment
3. National Fire Protection Association (NFPA) NFPA (National Fire Protection Association), 1 Batterymarch Park Quincy, MA 02269-9101 USA Telephone: (617) 770-3000 Fax: (617) 770-0700 www.nfpa.org	NFPA 70, National Electrical Code NFPA 76, Recommended Practice for the Fire Protection of Telecommunications Facilities.

APPENDIX B

GLOSSARY

AOR: Assumption of Responsibility.

Access Provider (AP): The operator of any facility that is used to convey telecommunications signals to and from a customers premise.

ADAAG: Americans with Disabilities Act Accessibility Guidelines.

Backbone: A facility (e.g. pathway, cable or conductors) between telecommunications rooms, or floor distribution terminals, the entrance facilities, and the equipment room within or between buildings.

BAN: Base Area Network.

BCO: Base Communications Officer.

Boundary 1: Suite of network security components configured to provide perimeter security at the NMCI NOCs connecting NMCI to the NIPRNET and SIPRNET.

Boundary 2: Suite of network security components configured to provide perimeter security at local sites connecting NMCI to legacy networks.

CAA: Controlled Access Area.

CADD: Computer Aided Design, Drafting.

CIO: Chief Information Officer.

CLIN: Contract Line Item Number.

COINS: Communities of Interest Network Services.

Demarcation Point (Demarc or DP): This is the point at which the access providers network ends. Generally, this is where the access providers maintenance responsibility ends.

Distribution Frame (DF): Generic term for a common wiring interconnect point where cable routes can be changed and equipment interconnected.

EDS (Electronic Data Systems): The prime contractor responsible for providing (building-maintaining) the Navy/Marine Corps Intranet.

Entrance Facility (EF): An entrance to a building for both public and private network cables (including wireless). It consists of the entrance point to the building and continues to the entrance room or space.

EM: Electromagnetic.

Entrance Room: A space in which the joining of inter- or intra- building telecommunications backbone facilities takes place.

ECM Equipment Cooling Module.

Equipment Room (ER): An environmentally controlled centralized space for telecommunications equipment that usually houses a main or intermediate cross-connect. The function of the ER, in NMCI terminology, is included in the EF or TR.

Facility Contractor: The contractor(s) responsible for the new construction for the benefit of DoN, including new facilities, additions, or major renovations.

FMD: Facilities Management Department.

G6: USMC base communications officer.

GFE: Government Furnished Equipment.

GFF: Government Furnished Facilities.

Horizontal Cabling: The cabling between and including the telecommunications outlet/connector and the horizontal cross-connect.

IA: Information Assurance.

Intermediate Distribution Frame (IDF): NMCI common usage for the equipment that provides the access layer in the NMCI architecture. This guidance refers to it as the IC.

Intermediate Cross-connect (IC): A cross-connect between first level and second level backbone cabling.

Inside Plant (ISP): Wiring and cabling located inside a building.

Internet Service Provider (ISP): An ISP (Internet service provider) is a company that provides individuals and other companies access to the Internet and other related services. An ISP has the equipment and the telecommunication line access required to have a point of presence on the Internet for the geographic area served.

Internet Protocol (IP): The Internet Protocol (IP) is the method or protocol by which data is sent from one computer to another on the Internet. Each computer (known as a host) on the Internet has at least one IP Address that uniquely identifies it from all other computers on the Internet.

LAN: Local Area Network.

Main Cross-connect (MC): A cross-connect for first level backbone cables, entrance cables, and equipment cables.

Main Distribution Frame (MDF): NMCI Common usage for the equipment that provides the distribution layer in the NMCI architecture. This guidance refers to it as the MC.

NCE: Network and Communications Engineer.

Network Operations Center (NOC): Control center for the NMCI network. In addition, under NMCI specialty usage, the NOC is the point of egress from the network.

NIPRNET: Not-classified-but-sensitive Internet Protocol Router Network.

NMCI: Navy and Marine Corps Intranet.

Outside Plant (OSP): Wiring and cabling located outside and between buildings.

PDS: Protected Distribution System.

Point of Presence (POP): The equipment room (ER) on a base without a server farm where the DP exists between the access provider and NMCI. It also contains the media conversion point between the public network and the NMCI network, the transport boundary and some of the network distribution routers and switches.

PRECON: Pre-construction meetings.

PSQ: Preliminary Site Questionnaire.

PWC: Public Works Center.

PWD: Public Works Detachment.

PWO: Public Works Office.

ROICC: Resident Officer in Charge of Construction.

SIPRNET: Secret Internet Protocol Router Network.

SCM: Site Concurrence Memorandum.

Server Farm: A location in the NMCI topology where all the servers required for content distribution and for network services are located.

SM: NMCI common usage for Site Manager.

SM: Single mode.

SPAWAR: Space and Naval Warfare Systems Command.

Telecommunications Room (TR): An enclosed space for housing telecommunications equipment, cable terminations, and cross-connect cabling, that is the recognized location of the horizontal cross-connect.

Technical Power Panel (TPP): In NMCI parlance, the dedicated power panel used to feed NMCI MC or IC equipment.

TGB: Telecommunications Ground Bar.

Transport Boundary: Suite of network security components configured to provide wide area network transport security.

UFAS: Uniform Federal Accessibility Standards.

UPS: Uninterruptible Power System.

USMC: United States Marine Corps.

UTP: Unshielded Twisted Pair.

vBNS+: is a specialized nationwide IP network that supports high-performance, high-bandwidth applications. Originating in 1995 as the very high performance Backbone Network Service (vBNS), vBNS+ is the product of a five-year cooperative agreement between WorldCom and the National Science Foundation.

Work Area (WA): A building space where the occupants interact with telecommunications terminal equipment.

WAN: Wide area network.

Figure B-1 Single Line DRAWING of EIA/TIA Facility/Function Terminology

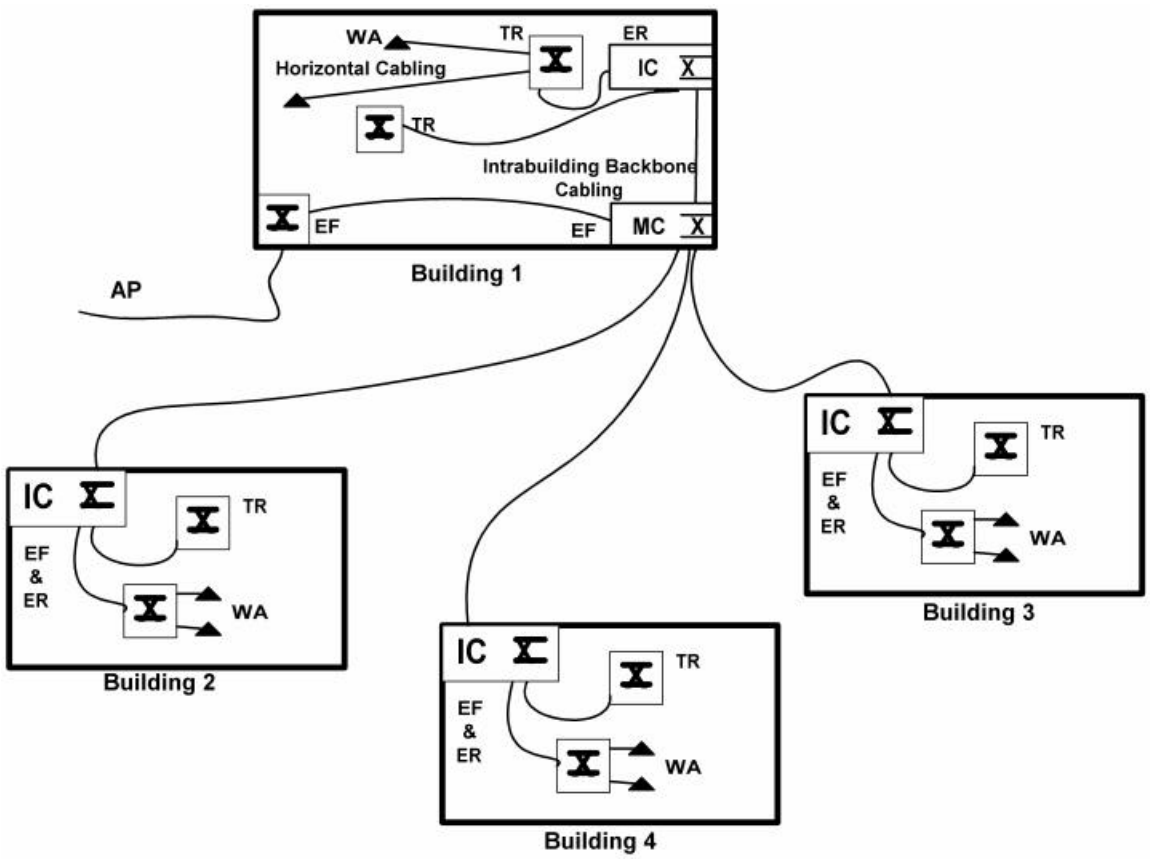

NOTES

1. This figure is not meant to be an all-inclusive representation of the telecommunications cabling system and is provided only as a typical example.

2. All cross-connects located in the telecommunications rooms (TRs) in this figure are horizontal cross-connects (HC's).

3. The equipment room (ER) for the POP would be connected to the access provider (AP) as in Building 1 in the example.

4. NMCI terminology/function has been limited to EFs and TRs. The function of the ER is included within the EF or TR.

Legend

Access Provider ..... AP
Entrance Facility ..... EF
Equipment Room ..... ER
Intermediate cross-connect IC
Main cross-connect ..... MC
Telecommunications Room ..... TR
Work Area ..... WA
Telecommunications outlet ..... ▲
Cross connect X

APPENDIX C

SUPPLEMENTARY TECHNICAL GUIDANCE

C-1 **STRUCTURAL.** Facilities including modifications to walls, floors, ceilings, doors, and penetrations should be designed and built in accordance with UFC 1-200-01, *Design: General Building Requirements*. This UFC has been recently issued by DoD and adopts the *International Building Code 2000* (IBC 2000) as the best standard commercial practice. In addition, the UFC adds some specific military requirements that exceed the minimum IBC 2000 guidelines to establish the minimum acceptable standards for DoD design and construction.

The EF and TR floors are of particular concern and must be capable of supporting the incoming equipment. Table C-1 incorporates the UFC requirements as well as information from Military Handbook 1002/2A, *Structural Loads* defining the minimum uniform live loads. New facilities must be designed to ensure that they are capable of safely supporting the maximum loads (including equipment loads) likely to be imposed by the intended use, but not less than the minimum loads indicated in Table C-1. Existing facilities, and modifications to existing facilities, must be evaluated by a licensed structural engineer to verify that they are capable of safely supporting the maximum loads (including equipment loads) likely to be imposed by the intended use, but not less than the minimum loads indicated in Table C-1. ANSI/TIA/EIA-569A *Commercial Building Standards for Telecommunications Pathways and Spaces*, Annex B, identifies additional access floor loading design guidance requirements that must be considered.

Penetrations in existing walls and floors must be evaluated by a licensed structural engineer to verify that they do not adversely affect the structural integrity of the facility.

The NMCI standard minimum weight allowances for converted ER and TR spaces are as shown in Table C-2:

TABLE C-1 MINIMUM UNIFORMLY DISTRIBUTED LIVE LOADS AND MINIMUM CONCENTRATED LIVE LOADS

OCCUPANCY or USE	UNIFORM (kPa)	UNIFORM (psf)	CONCENTRATED (kN)	CONCENTRATED (lbs)
Offices	2.4	50	8.9	2000
Computer Rooms (Business Equipment including TRs & EFs within NMCI POPs)	4.8	100	8.9	2000
Automatic Data Processing / Telephone Switch Rooms (Including NMCI POPs)	7.2	150	8.9	2000
Access Floor Systems – Computer Use	4.8	100	8.9	2000

TABLE C-2 NMCI MINIMUM LOADS*

OCCUPANCY or USE	UNIFORM (kPa)	UNIFORM (psf)	CONCENTRATED (kN)	CONCENTRATED (lbs)
Converted Spaces for Pops	7.2	150	8.9	2000
Converted Spaces for ERs	3.6	75	4.45	1000
Converted Spaces for TRs	2.4	50	No Recommendation	No Recommendation

* Floors must be designed to support the uniformly distributed live loads or the concentrated loads shown above, whichever produces the greater load effects. Unless otherwise specified, the indicated concentration is assumed to be uniformly distributed over a 0.76 by 0.76 m (2.5 by 2.5 ft) area (0.58m^2 (6.25 ft^2) and located to produce the maximum load effects in the structural members.

C-2 GROUNDING

C-2.1 **Facility Grounding.** All facility grounding must be in accordance with TIA-J-STD-607, *Commercial Building Bond and Grounding Requirements for Telecommunications*, according to Figure C-1. Grounding must also meet NFPA 70 article 645.

C-2.2 **Equipment Grounding.** Dedicated equipment grounding is required. Telecommunications Ground Bar (TGB) size for Equipment Rooms (ER's) and Telecommunications Rooms (TRs) is 50.8 mm high by 300 mm wide by 3.4 mm tall (2 in x 12 in x ¼ in) minimum connected to building steel, or equivalent. Bus bars are to be drilled with parallel holes to accommodate 2-hole lugs. All grounding is to conform to ANSI/TIA/EIA standards. For converted NMCI spaces when the building does not meet the standard, the telecommunications backbone ground specified in TIA-J-STD-607 cannot be met. Instead, equipment is grounded to chassis, chassis is grounded to the cabinet and each cabinet is individually connected to the ground bar in its respective TR by ISF as indicated in Figure C-2. The selected cabinets must be UL listed and labeled for ground continuity. All equipment must installed per manufacturer's recommendations and remain securely fastened.

C-3 MECHANICAL.

C-3.1 **General Requirements.** NMCI Equipment must operate continuously (year-round), as must other telecommunications equipment co-located within the NMCI and Telecommunications (NMCI/Telecom) spaces. These equipment installations generate internal sensible heat, with little to no latent heat (moisture) except for that produced by any personnel located within the space. The space cooling equipment must be able to operate year-round, without regard to whether the rest of the facility requires cooling, heating, or only ventilation. Heating and cooling systems on building time clocks or other temperature setback mean, are not to be used for NMCI/Telecom spaces

- Provide NMCI/Telecom spaces with independent heating & cooling systems.

The ventilation (outside air) must be provided by the systems serving the remainder of the building, unless the NMCI/Telecom space is regularly staffed. If the NMCI/Telecom space is regularly staffed, the independent heating and cooling systems must condition the outside air for these spaces.

- Provide conditioned outside air ventilation in compliance with ASHRAE Standard 62 *Ventilation for Acceptable Indoor Air Quality*.

Unless personnel are located in the NMCI/Telecom spaces most of the time, size the cooling equipment to be able to provide at least 20% latent heat (moisture removal) capacity, but size to utilize about 90% of the total capacity to meet the sensible loads. For calculated loads less than one ton (12,000 BTU/hr), provide a single air conditioner (A/C) unit, with space and power capacity available to install another identical one for future load growth. For loads greater than one ton, install two identical units sized for 50% to 60% of the load each, and provide space and power capacity for an additional identical size unit for future load growth. For loads greater than about 10 tons, <u>and</u> where redundant UPS have been installed in the NMCI/Telecom equipment, provide more than two A/C units to meet the N + 1 redundancy criteria, where N is the number of A/C units required to meet the load (not less than 2) and 1 is the identical size redundant spare. In addition to the 1 redundant spare A/C unit, provide space and power capacity for one additional identical size A/C unit for future load growth.

Air conditioning equipment should be installed near an exterior wall, if possible, to allow easy use of outdoor condensing units, with indoor evaporators. Since the ventilation load is to be taken by the separate building system, no HVAC ductwork should need to penetrate the exterior wall, unless the space is to be regularly manned and outside air is to be conditioned by the NMCI provided independent system. High wall-mounted ductless split system air conditioner units are suggested, connecting through the wall via a single conduit

penetration that contains the refrigerant supply and suction lines, the power and control cables, and the condensate disposal line directly & immediately outside the NMCI/Telecom space. Avoid running any condensate lines above the NMCI/Telecom equipment and, if possible, keep these lines entirely out of the space. Cassette type ductless split system evaporators, laying in suspended ceiling systems are an acceptable, but less desirable, solution. These rely on a condensate pump and line to convey the condensate out of the space. Where a raised floor is to be provided, that is sufficiently high enough to act as a plenum; floor-mounted DX computer room air conditioners may be used. Pay particular attention to sealing each penetration of the exterior wall, floor, or roof, to preclude penetration of wind-driven rain or snow. Ensure air conditioning systems are able to start and operate at both low and high ambient outside air temperatures to maintain the design indoor conditions.

Utilize single evaporator units with individual condenser units, to maintain the redundancy needed. Split units are available with up to 3 or 4 indoor evaporator coils driven by a single outdoor condenser unit. While this is suitable for homes and offices, it is not appropriate for the redundancy required by the NMCI/Telecom rooms.

Chilled water systems, and evaporative-cooled water-glycol systems, are discouraged in order to reduce the probability of fluid leaks and possible damage to the NMCI/Telecom equipment in the space. If these systems exist, and have extra capacity available, they may be used; but only if the cooling coil units are located outside the NMCI/Telecom spaces, and the supply and return air is ducted into and out of the space. Insulate both supply air and return air ducts within the NMCI/Telecom spaces to prevent condensation from forming on the ducts and dripping onto the electronic equipment.

Avoid running refrigerant lines within the NMCI/Telecom space. If refrigerant suction lines must be run within the NMCI/Telecom space, insulate them and run them inside of a conduit made of pvc or cpvc pipe, with cemented joints made water-tight; also, insulate the outside of the conduit. The insulation must be flexible cellular type. Pitch the conduit to drain outside the NMCI/Telecom space.

Provide corrosion protection for all outdoor equipment located in salt-laden coastal areas. Provide snow protection for all outdoor equipment located in areas subject to heavy snow accumulations.

C-3.2 **Design Conditions.** Temperature is to be maintained at 23.8 ^{0}C +/- 5 ^{0}C (75 ^{0}F +/- 10 ^{0}F.) No humidity control is required. Under emergency conditions, variation of +/- 10 ^{0}C (+/- 20 ^{0}F) is acceptable.

Designer must base the cooling load calculations upon the actual equipment to be installed, if known; see Tables D-1, D-2, and D-3. If actual equipment is unknown, base load calculations on not less than one Type "SIDF1" equipment rack for NMCI (Table D-3 Cabinet SIDF1 = 3728 BTU/HR). If co-located Telecom equipment (such as Telephone racks & switches, Fire alarm panels, and Intrusion Detection Systems) is to be present, consider it equivalent to not less than one Type "SIDF2" equipment rack (Table D-3 Cabinet SIDF2 = 5170 BTU/HR). These loads do not include the infrastructure loads such as lighting and other equipment located within the NMCI/Telecom spaces.

Calculate the cooling load on the design cooling day, and the heating load on the design heating day, without the surrounding rooms being conditioned, as though on an extended weekend shutdown of the remaining building systems, similar to a 3 or 4 day holiday period. Further, size the heating system to maintain the design minimum temperature without the NMCI/Telecom equipment operating.

Cooling capacity must be adequate to cover the completely built-out space with a + 10% margin.

Existing building cooling is acceptable, provided the system is capable of preventing the NMCI/Telecom equipment from overheating in the event of a commercial power interruption. Air systems such as variable air volume units are also acceptable to meet cooling requirements. An ISF-provided independent cooling system for the POP equipment space is an ISF choice of last resort. The power requirements for the air conditioning equipment, when provided by ISF, are included in the electrical loads in Appendix D. See 4-2.2 for cooling guidelines.

- If cooling shuts off and power stays on, NMCI equipment must be cooled. The redundant A/C units or ambient exhaust ventilation must be sufficient to offer adequate cooling.

- If power shuts off, NMCI equipment will shut off once the UPS is depleted.

The ambient temperature will be measured 1.5 m (5 ft) above the floor level, after the equipment is in operation, at any point along an equipment aisle center line. (EIA/TIA Standard 569A, Section 8, paragraph 8.2.3.6.3).

Figure C-1 Scope of TIA-J-STD-607 for Large Commercial Buildings

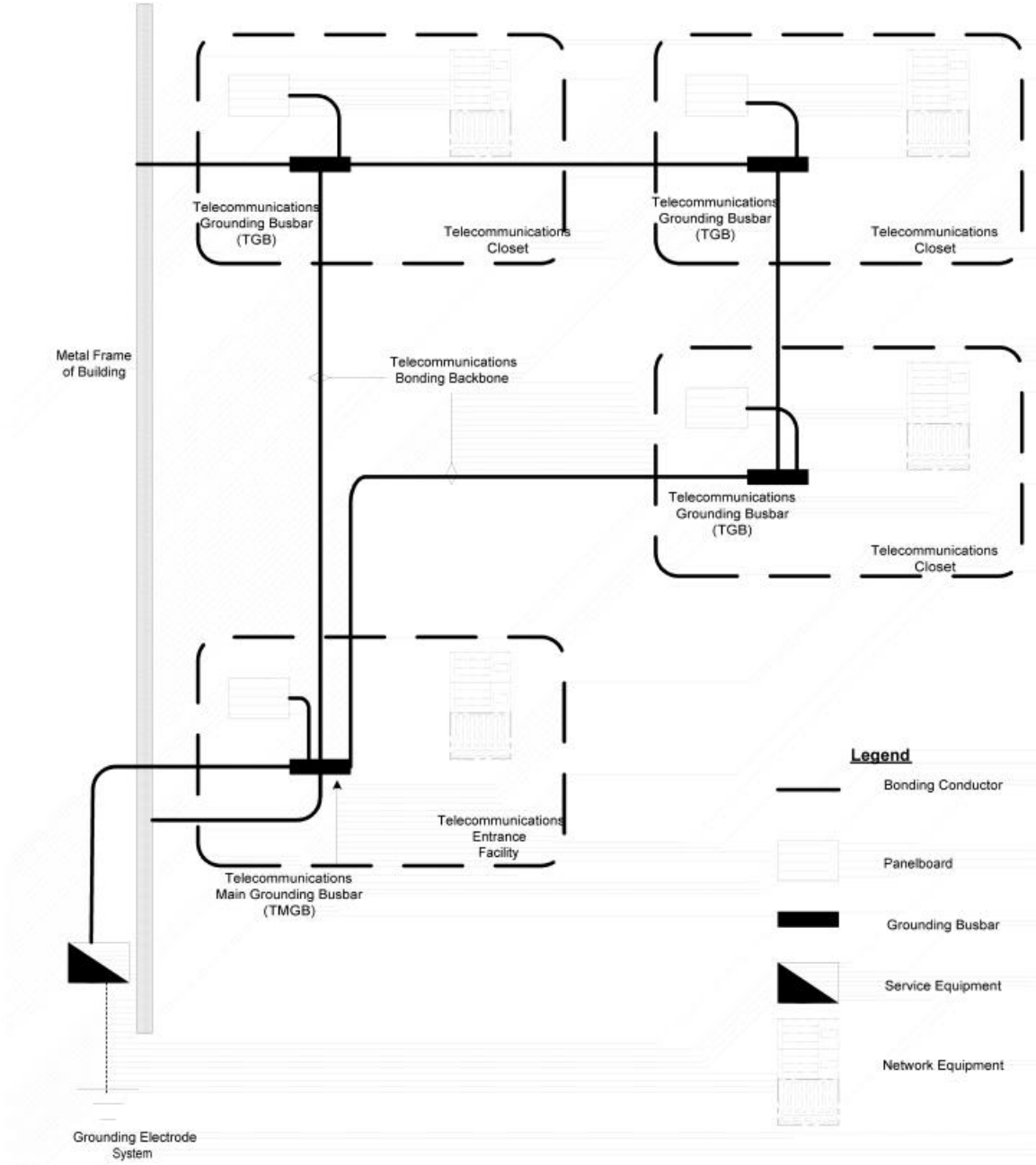

Note: Include interconnecting bonding jumper when required on multistory facilities per TIA-J-STD-607 paragraph 5.3.4.2

Exclusions from TIA-J-STD-607

The Standard does not provide requirements for:

- Grounding and bonding of any telecommunications equipment or its associated wiring;
- Values of surge current immunity and insulation withstand voltages;
- Methods for verifying and maintaining bonding and grounding networks;
- Specific methods for RFI/EMI mitigation for equipment or systems;
- Protector/Arrester requirements;
- Specific user safety;
- Grounding and bonding practices of the local exchange carriers;
- The application and maintenance of the local exchange carrier's primary protection. Such protection must be the responsibility of the local exchange carrier as mandated within FCC Rules and is not a part of this Standard;
- and Electrical service entrance.

Figure C-2

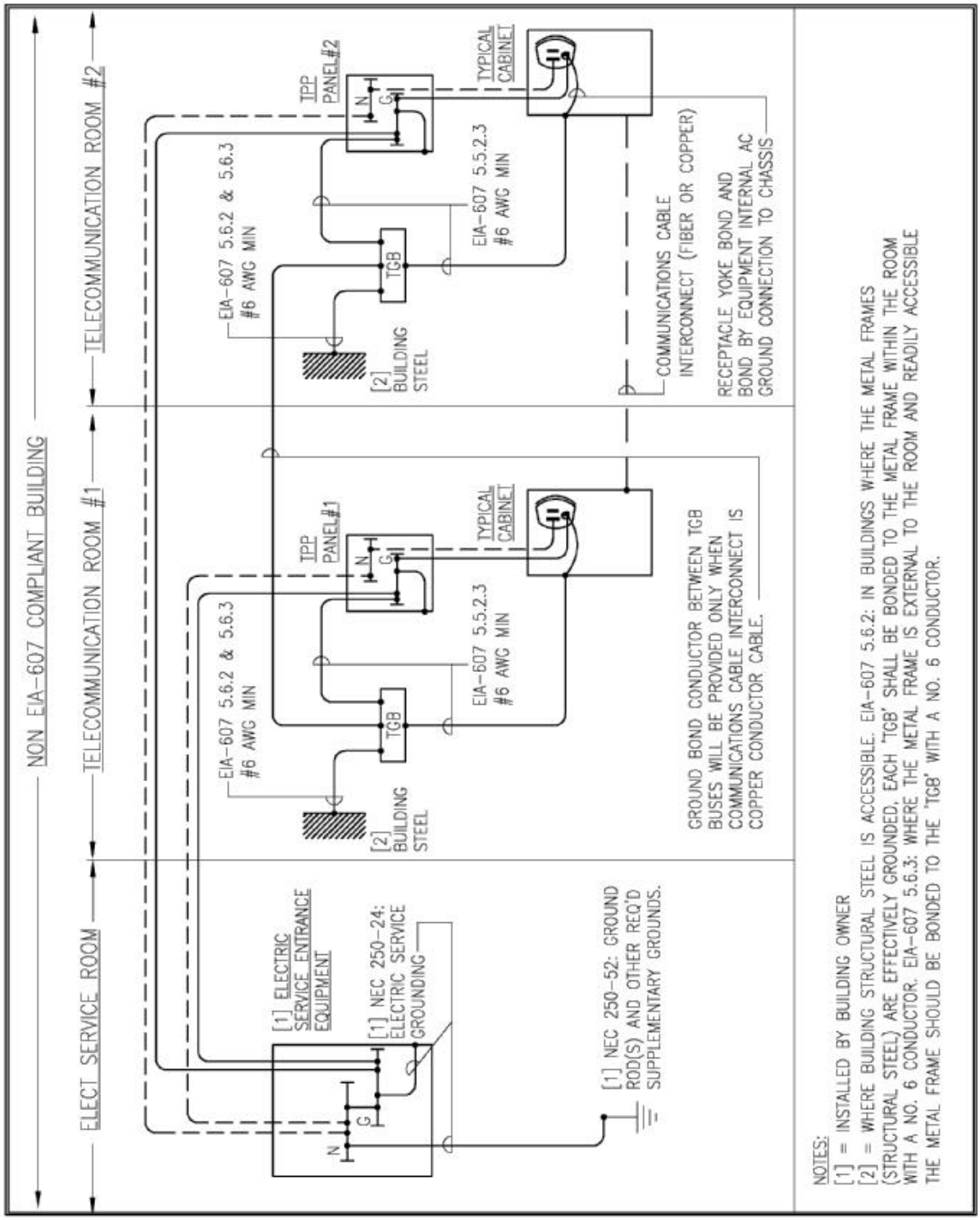
NON EIA-607 COMPLIANT BUILDING
TELECOMMUNICATION ROOM #2
TELECOMMUNICATION ROOM #1
ELECT SERVICE ROOM
TPP PANEL#2
TYPICAL CABINET
EIA-607 5.6.2 & 5.6.3 #6 AWG MIN
EIA-607 5.5.2.3 #6 AWG MIN
TGB
[2] BUILDING STEEL
COMMUNICATIONS CABLE INTERCONNECT (FIBER OR COPPER)
RECEPTACLE YOKE BOND AND BOND BY EQUIPMENT INTERNAL AC GROUND CONNECTION TO CHASSIS
TPP PANEL#1
GROUND BOND CONDUCTOR BETWEEN TGB BUSES WILL BE PROVIDED ONLY WHEN COMMUNICATIONS CABLE INTERCONNECT IS COPPER CONDUCTOR CABLE.
[1] ELECTRIC SERVICE ENTRANCE EQUIPMENT
[1] NEC 250-24: ELECTRIC SERVICE GROUNDING
[1] NEC 250-52: GROUND ROD(S) AND OTHER REQ'D SUPPLEMENTARY GROUNDS.
NOTES:
[1] = INSTALLED BY BUILDING OWNER
[2] = WHERE BUILDING STRUCTURAL STEEL IS ACCESSIBLE. EIA-607 5.6.2: IN BUILDINGS WHERE THE METAL FRAMES (STRUCTURAL STEEL) ARE EFFECTIVELY GROUNDED, EACH 'TGB' SHALL BE BONDED TO THE METAL FRAME WITHIN THE ROOM WITH A NO. 6 CONDUCTOR. EIA-607 5.6.3: WHERE THE METAL FRAME IS EXTERNAL TO THE ROOM AND READILY ACCESSIBLE THE METAL FRAME SHOULD BE BONDED TO THE 'TGB' WITH A NO. 6 CONDUCTOR.

APPENDIX D

ELECTRICAL REQUIREMENTS

These notes refer to tables D-1, D-2 and D-3 on the following pages.

Notes:

- Load on building system will be based on the feeder amps not the breaker size.
- If the requested additional load to the building, when added to the existing building loads, creates a marginal condition on the service size, then, the building loads will be looked at on an individual basis to verify actual demand load based on the actual NMCI seat count. If this demand load exceeds building capacity, then DoN must provide additional power to the building.
- If existing air conditioning within the facility is adequate to support the NMCI requirements, the air conditioning ampacity (site cooling amps) should be subtracted from the total feeder ampacity indicated. This would also reduce the breaker and wire sizes.
- Cooling (Heat to Room) only includes all NMCI equipment. Other loads such as lighting and building envelope must be added.
- These tables were developed for the NMCI contractor survey and design teams. The nomenclature is therefore, not self explanatory. If detailed information is required, it is available from the NMCI contractor.
- Where an Equipment Cooling Module (ECM) is indicated, it refers to an inside cabinet air conditioner with independent ducting out of the room and does not require additional space cooling.

Table D-1 -- Point of Presence (POP)

Large Base No Server Farm (450 to 1700 Seats)- 208 V POWER FEED							
EQUIPMENT	VOLT	CABINET EQUIPMENT AMPS	SITE COOLING AMPS	FEEDER AMPS	FEEDERS		COOLING
	(VOLT/Phase)	Phase A/B/C	Phase A/B/C	Phase A/B/C	BK AMP/POLE	Wire Size	Heat to Room (Btu/hr)
UPS 1	208Y/120 3PH	94	-	94	175A/3P	4#2/0, #6G, 2"C	114,087
UPS 2	208Y/120 3PH	6	-	6	175A/3P	4#2/0, #6G, 2"C	
A/C #1	208Y/120 3PH	-	70	70	150A/3P	3#3, #8 G, 1"C	
A/C #2	208Y/120 3PH	-	70	70	150A/3P	3#3, #8 G, 1"C	
SINGLE SITE FEEDER:				239	350A/3P	3-500KCM,1-3/0N,#1 G, 3-1/2"C	

Large Base No Server Farm (450 to 1700 Seats)-480 V POWER FEED							
EQUIPMENT	VOLT	CABINET EQUIPMENT AMPS	SITE COOLING AMPS	FEEDER AMPS	FEEDERS		COOLING
	(VOLT/Phase)	Phase A/B/C	Phase A/B/C	Phase A/B/C	BK AMP/POLE	Wire Size	Heat to Room (Btu/hr)
UPS 1	480V 3PH	42	-	42	80A/3P	4#2/0, #6G, 2"C	117,141
UPS 2	480V 3PH	2	-	2	80A/3P	4#2/0, #6G, 2"C	
A/C #1	480V 3PH	-	36	36	60A/3P	3#3, #8 G, 1"C	
A/C #2	480V 3PH	-	36	36	60A/3P	3#3, #8 G, 1"C	
SINGLE SITE FEEDER:				116	175A/3P	3-2/0, #6 G, 1-1/2"C	

DPOP 5 & 6 Redundant Medium Base - (251 to 449 Seats)- (Two - One Ton A/C units)										
MODE	VOLT	CABINET EQUIPMENT AMPS		SITE COOLING AMPS		FEEDER AMPS		TPP FEEDER		COOLING
	(VOLT/Phase)	Phase A	Phase B	Phase A	Phase B	Phase A	Phase B	BK AMP/POLE	Wire Size	Heat to Room (Btu/hr)
NORMAL	120/208/1 PH.	20	17	20	20	40	37	70/2	3#4, #8 G, 1"C	13,859
UPS FAILURE	120/208/1 PH.	10	27	20	20	30	47			

DPOP 14 & 15 Redundant Medium Base - (251 to 449 Seats)-EXT. UPS(Two- 1 ton A/C units)										
MODE	VOLT	CABINET EQUIPMENT AMPS		SITE COOLING AMPS		FEEDER AMPS		TPP FEEDER		COOLING
	(VOLT/Phase)	Phase A	Phase B	Phase A	Phase B	Phase A	Phase B	BK AMP/POLE	Wire Size	Heat to Room (Btu/hr)
NORMAL	120/208/1 PH.	14	15	20	20	34	35	50/2	3#8, #10 G, 1"C	12,403

DPOP3 & 7 Redundant Small Base_2 (86 to 250 Seats) [Two 1-Ton A/C units - Preferred]										
MODE	VOLT	CABINET EQUIPMENT AMPS		SITE COOLING AMPS		FEEDER AMPS		TPP FEEDER		COOLING
	(VOLT/Phase)	Phase A	Phase B	Phase A	Phase B	Phase A	Phase B	BK AMP/POLE	Wire Size	Heat to Room (Btu/hr)
NORMAL	120/208/1 PH.	23	20	20	20	43	40	70/2	3#4, #8 G, 1"C	15,918
UPS FAILURE	120/208/1 PH.	33	10	20	20	53	30			

DPOP 3 & 7 Redundant Small Base_2 (86 to 250 Seats) [One 2-Ton A/C unit - Alternate]										
MODE	VOLT	CABINET EQUIPMENT AMPS		SITE COOLING AMPS		FEEDER AMPS		TPP FEEDER		COOLING
	(VOLT/Phase)	Phase A	Phase B	Phase A	Phase B	Phase A	Phase B	BK AMP/POLE	Wire Size	Heat to Room (Btu/hr)
NORMAL	120/208/1 PH.	23	20	17	17	40	37	70/2	3#4, #8 G, 1"C	15,918
UPS FAILURE	120/208/1 PH.	33	10	17	17	50	27			

DPOP 12 & 13 Redundant Small Base_2 (86 to 250 Seats) [One 2-Ton A/C unit - Alternate] -EXT. UPS										
MODE	VOLT	CABINET EQUIPMENT AMPS		SITE COOLING AMPS		FEEDER AMPS		TPP FEEDER		COOLING
	(VOLT/Phase)	Phase A	Phase B	Phase A	Phase B	Phase A	Phase B	BK AMP/POLE	Wire Size	Heat to Room (Btu/hr)
NORMAL	120/208/1 PH.	14	13	17	17	31	29	50/2	3#8, #10 G, 1"C	12,195

DPOP 12 & 13 Redundant Small Base_2 (86 to 250 Seats) [Two 1-Ton A/C unit - Alternate] -EXT. UPS										
MODE	VOLT	CABINET EQUIPMENT AMPS		SITE COOLING AMPS		FEEDER AMPS		TPP FEEDER		COOLING
	(VOLT/Phase)	Phase A	Phase B	Phase A	Phase B	Phase A	Phase B	BK AMP/POLE	Wire Size	Heat to Room (Btu/hr)
NORMAL	120/208/1 PH.	14	13	20	20	34	33	50/2	3#8, #10 G, 1"C	12,195

DPOP 19 & 20- Redundant Small Base (34 To 85 Seats) [Two- 1-Ton A/C unit]										
MODE	VOLT	CABINET EQUIPMENT AMPS		SITE COOLING AMPS		FEEDER AMPS		TPP FEEDER		COOLING
	(VOLT/Phase)	Phase A	Phase B	Phase A	Phase B	Phase A	Phase B	BK AMP/POLE	Wire Size	Heat to Room (Btu/hr)
NORMAL	120/208/1 PH.	18	25	20	20	38	45	70/2	3#4, #8 G, 1"C	12,600
UPS FAILURE	120/208/1 PH.	26	8	20	20	46	28			

DPOP 19 & 20- Redundant Small Base (34 To 85 Seats) [One- 2-Ton A/C unit]										
MODE	VOLT	CABINET EQUIPMENT AMPS		SITE COOLING AMPS		FEEDER AMPS		TPP FEEDER		COOLING
	(VOLT/Phase)	Phase A	Phase B	Phase A	Phase B	Phase A	Phase B	BK AMP/POLE	Wire Size	Heat to Room (Btu/hr)
NORMAL	120/208/1 PH.	18	15	20	20	38	35	70/2	3#4, #8 G, 1"C	12,600
UPS FAILURE	120/208/1 PH.	26	8	20	20	46	28			

DPOP 24 & 25 Redundant Small Base -EXT. UPS-Two-1 Ton A/C										
MODE	VOLT	CABINET EQUIPMENT AMPS		SITE COOLING AMPS		FEEDER AMPS		TPP FEEDER		COOLING
	(VOLT/Phase)	Phase A	Phase B	Phase A	Phase B	Phase A	Phase B	BK AMP/POLE	Wire Size	Heat to Room (Btu/hr)
NORMAL	120/208/1 PH.	8	8	20	20	28	28	50/2	3#8, #10 G, 1"C	12,602

DPOP 24 & 25 Redundant Small Base -EXT. UPS-One -2 Ton A/C										
MODE	VOLT	CABINET EQUIPMENT AMPS		SITE COOLING AMPS		FEEDER AMPS		TPP FEEDER		COOLING
	(VOLT/Phase)	Phase A	Phase B	Phase A	Phase B	Phase A	Phase B	BK AMP/POLE	Wire Size	Heat to Room (Btu/hr)
NORMAL	120/208/1 PH.	8	8	17	17	25	25	50/2	3#8, #10 G, 1"C	12,602

DPOP4- Redundant Small Site (1 to 33 Seats) [Two 1-Ton A/C units - Preferred]										
MODE	VOLT	CABINET EQUIPMENT AMPS		SITE COOLING AMPS		FEEDER AMPS		TPP FEEDER		COOLING
	(VOLT/Phase)	Phase A	Phase B	Phase A	Phase B	Phase A	Phase B	BK AMP/POLE	Wire Size	Heat to Room (Btu/hr)
NORMAL	120/208/1 PH.	17	10	20	20	37	30	70/2	3#4, #8 G, 1"C	10,196
UPS FAILURE	120/208/1 PH.	25	2	20	20	45	22			

DPOP 4- Redundant Small Site (1 to 33 Seats) [One 2-Ton A/C unit - Alternate]										
MODE	VOLT	CABINET EQUIPMENT AMPS		SITE COOLING AMPS		FEEDER AMPS		TPP FEEDER		COOLING
	(VOLT/Phase)	Phase A	Phase B	Phase A	Phase B	Phase A	Phase B	BK AMP/POLE	Wire Size	Heat to Room (Btu/hr)
NORMAL	120/208/1 PH.	17	10	17	17	34	27	70/2	3#4, #8 G, 1"C	10,196
UPS FAILURE	120/208/1 PH.	25	2	17	17	42	19			

DPOP 11-Redundant Small Site (1 to 33 Seats) [Two 1-Ton A/C units - Preferred]- EXT. UPS										
MODE	VOLT	CABINET EQUIPMENT AMPS		SITE COOLING AMPS		FEEDER AMPS		TPP FEEDER		COOLING
	(VOLT/Phase)	Phase A	Phase B	Phase A	Phase B	Phase A	Phase B	BK AMP/POLE	Wire Size	Heat to Room (Btu/hr)
NORMAL	120/208/1 PH.	16	12	20	20	36	32	50/2	3#8, #10 G, 1"C	11,150

DPOP 11-Redundant Small Site (1 to 33 Seats) [One 2-Ton A/C units - Preferred] - EXT. UPS										
MODE	VOLT	CABINET EQUIPMENT AMPS		SITE COOLING AMPS		FEEDER AMPS		TPP FEEDER		COOLING
	(VOLT/Phase)	Phase A	Phase B	Phase A	Phase B	Phase A	Phase B	BK AMP/POLE	Wire Size	Heat to Room (Btu/hr)
NORMAL	120/208/1 PH.	15	12	17	17	31	28	50/2	3#8, #10 G, 1"C	11,150

DPOP 2- Non-Redundant Small Base _2 (86 to 250 Seats) [A/C 1 TON UNIT]										
MODE	VOLT	CABINET EQUIPMENT AMPS		SITE COOLING AMPS		FEEDER AMPS		TPP FEEDER		COOLING
	(VOLT/Phase)	Phase A	Phase B	Phase A	Phase B	Phase A	Phase B	BK AMP/POLE	Wire Size	Heat to Room (Btu/hr)
NORMAL	120/208/1 PH.	13	11	10	10	23	21	50/2	3#8, #10 G, 1"C	9,078
UPS FAILURE	120/208/1 PH.	24	-	10	10	34	10			

DPOP 23- Non Redundant Small Base_2 (86 TO 250 Seats) [Two 1-Ton A/C unit]-EXT.UPS										
MODE	VOLT	CABINET EQUIPMENT AMPS		SITE COOLING AMPS		FEEDER AMPS		TPP FEEDER		COOLING
	(VOLT/Phase)	Phase A	Phase B	Phase A	Phase B	Phase A	Phase B	BK AMP/POLE	Wire Size	Heat to Room (Btu/hr)
NORMAL	120/208/1 PH.	8	8	20	20	28	28	50/2	3#8, #10 G, 1"C	UPS

DPOP 18- NON REDUNDANT SMALL BASE (SEATS 17-85) [Two 1-Ton A/C units]										
MODE	VOLT	CABINET EQUIPMENT AMPS		SITE COOLING AMPS		FEEDER AMPS		TPP FEEDER		COOLING
	(VOLT/Phase)	Phase A	Phase B	Phase A	Phase B	Phase A	Phase B	BK AMP/POLE	Wire Size	Heat to Room (Btu/hr)
NORMAL	120/208/1 PH.	21	23	20	20	41	43	70/2	3#4, #8 G, 1"C	9,234
UPS FAILURE	120/208/1 PH.	33	12	20	20	53	32			

DPOP 22- Non Redundant Small Base (17 To 85 Seats) [Two 1-Ton A/C unit] EXT UPS										
MODE	VOLT	CABINET EQUIPMENT AMPS		SITE COOLING AMPS		FEEDER AMPS		TPP FEEDER		COOLING
	(VOLT/Phase)	Phase A	Phase B	Phase A	Phase B	Phase A	Phase B	BK AMP/POLE	Wire Size	Heat to Room (Btu/hr)
NORMAL	120/208/1 PH.	20	19	19	10	39	29	50/2	3#8, #10 G, 1"C	8,668

DPOP 1-Non-Redundant Small Site (1 to 16 Seats) [2 - 1 TON UNITS]										
MODE	VOLT	CABINET EQUIPMENT AMPS		SITE COOLING AMPS		FEEDER AMPS		TPP FEEDER		COOLING
	(VOLT/Phase)	Phase A	Phase B	Phase A	Phase B	Phase A	Phase B	BK AMP/POLE	Wire Size	Heat to Room (Btu/hr)
NORMAL	120/208/1 PH.	16	14	10	10	26	24	50/2	3#8, #10 G, 1"C	11,406
UPS FAILURE	120/208/1 PH.	33	12	10	10	43	22			

DPOP 1-Non-Redundant Small Site (1 to 16 Seats) [One 2-Ton A/C unit - Alternate]										
MODE	VOLT	CABINET EQUIPMENT AMPS		SITE COOLING AMPS		FEEDER AMPS		TPP FEEDER		COOLING
	(VOLT/Phase)	Phase A	Phase B	Phase A	Phase B	Phase A	Phase B	BK AMP/POLE	Wire Size	Heat to Room (Btu/hr)
NORMAL	120/208/1 PH.	16	14	17	17	33	31	50/2	3#8, #10 G, 1"C	11,406
UPS FAILURE	120/208/1 PH.	30	-	17	17	47	17			

Cabinet 'WPOP10'(SEAT COUNT LESS THAN 24)										
MODE	VOLT	CABINET EQUIPMENT AMPS		SITE COOLING AMPS		FEEDER AMPS		TPP FEEDER		COOLING
	(VOLT/Phase)	Phase A	Phase B	Phase A	Phase B	Phase A	Phase B	BK AMP/POLE	Wire Size	Heat to Room (Btu/hr)
NORMAL	120/208/1 PH.	3	3	3	3	6	6	50/2	3#8, #10 G, 1"C	3,296

Cabinet 'WPOP21'(SEAT COUNT 1-21)- VSS -uTB(COI)										
MODE	VOLT	CABINET EQUIPMENT AMPS		SITE COOLING AMPS		FEEDER AMPS		TPP FEEDER		COOLING
	(VOLT/Phase)	Phase A	Phase B	Phase A	Phase B	Phase A	Phase B	BK AMP/POLE	Wire Size	Heat to Room (Btu/hr)
NORMAL	120/208/1 PH.	3	-	-	3	3	3	50/2	3#8, #10 G, 1"C	1,072

Cabinet 'WPOP21'(SEAT COUNT 1-21)- VSS-uTBa										
MODE	VOLT	CABINET EQUIPMENT AMPS		SITE COOLING AMPS		FEEDER AMPS		TPP FEEDER		COOLING
	(VOLT/Phase)	Phase A	Phase B	Phase A	Phase B	Phase A	Phase B	BK AMP/POLE	Wire Size	Heat to Room (Btu/hr)
NORMAL	120/208/1 PH.	2	-	-	3	2	3	50/2	3#8, #10 G, 1"C	621

DHTB1& DHTB2 TRANSPORT BOUNDARY CABINETS - EXT UPS-(Two - 3 Ton A/C units)							
MODE	VOLT	CABINET EQUIPMENT AMPS	SITE COOLING AMPS	FEEDER AMPS	TPP FEEDER		COOLING
	(VOLT/Phase)	Phase A/B/C	Phase A/B/C	Phase A/B/C	BK AMP/POLE	Wire Size	Heat to Room (Btu/hr)
NORMAL	208Y120 3 PH	17	50	67	100/3	4 #3, #8 G, 1.25"C	24,813

DCTB1 AND DCTB 2 CLASSIFIED TRANSPORT BOUNDARY [TWO-1 Ton A/C unitS] EXT. UPS										
MODE	VOLT	CABINET EQUIPMENT AMPS		SITE COOLING AMPS		FEEDER AMPS		TPP FEEDER		COOLING
	(VOLT/Phase)	Phase A	Phase B	Phase A	Phase B	Phase A	Phase B	BK AMP/POLE	Wire Size	Heat to Room (Btu/hr)
NORMAL	120/208/1 PH.	11	11	20	20	31	31	50/2	3#8, #10 G, 1"C	11,717

DPOP 16-SERVER CABINET 1 (1701 to 5000 Seats) [One 2-Ton A/C unit]										
MODE	VOLT	CABINET EQUIPMENT AMPS		SITE COOLING AMPS		FEEDER AMPS		TPP FEEDER		COOLING
	(VOLT/Phase)	Phase A	Phase B	Phase A	Phase B	Phase A	Phase B	BK AMP/POLE	Wire Size	Heat to Room (Btu/hr)
NORMAL	120/208/1 PH.	33	17	29	29	61	46	100/2	3#3, #8 G, 1"C	19,853
UPS FAILURE	120/208/1 PH.	48	2	29	29	77	30			

DPOP17 SERVER CABINET 2 (1701 to 5000 Seats) [One 2-Ton A/C unit]										
MODE	VOLT	CABINET EQUIPMENT AMPS		SITE COOLING AMPS		FEEDER AMPS		TPP FEEDER		COOLING
	(VOLT/Phase)	Phase A	Phase B	Phase A	Phase B	Phase A	Phase B	BK AMP/POLE	Wire Size	Heat to Room (Btu/hr)
NORMAL	120/208/1 PH.	33	18	17	17	50	35	100/2	3#3, #8 G, 1"C	18,535
UPS FAILURE	120/208/1 PH.	49	2	17	17	66	19			

DPOP 16& 17 -SERVER CABINETS (1701 to 5000 Seats) [Two 2-Ton A/C unit] -EXT.UPS						
MODE	VOLT	CABINET EQUIPMENT AMPS	SITE COOLING AMPS	FEEDER AMPS	TPP FEEDER		COOLING
	(VOLT/Phase)	Phase A/B/C	Phase A/B/C	Phase A/B/C	BK AMP/POLE	Wire Size	Heat to Room (Btu/hr)
NORMAL	208Y/120 3 PH	31	65	96	125/2	4#1, #6 G, 1.5"C	32,972

Table D-2 Main Cross Connect

Main Cross Connect - Without Cooling Equipment											
CABINET	SEAT CNTS	VOLT	CABINET EQUIPMENT AMPS *		SITE COOLING AMPS		FEEDER AMPS		TPP FEEDER		COOLING
		(VOLT/Phase)	Phase A	Phase B	Phase A	Phase B	Phase A	Phase B	BK AMP/POLE	Wire Size	Heat to Room (Btu/hr)
DMDF1	< 96	120/208/1 PH.	18	16	0	0	18	16	30/2	3#10, #10G, 3/4"C	10,915
DMDF2	< 64	120/208/1 PH.	12	10	0	0	12	10	30/2	3#10, #10G, 3/4"C	7,197
DMDF3	< 64	120/1 PH.	11	9	0	0	11	9	30/2	3#10, #10G, 3/4"C	7,197
DMDF4	< 64	120/1 PH.	10	7	0	0	10	7	30/2	3#10, #10G, 3/4"C	6,331
DMDF5	< 60	120/208/1 PH.	10	7	0	0	10	7	30/2	3#10, #10G, 3/4"C	6,189
DMDF6	< 128	120/208/1 PH.	19	17	0	0	19	17	40/2	3#8, #10G, 3/4"C	6,331
DMDF6 (UPS Fault)	< 128	120/208/1 PH.	27	9	0	0	27	9	40/2	3#8, #10G, 3/4"C	13,848
DMDF7	<64	120/208/1 PH.	12	12	0	0	12	12	30/2	3#10, #10G, 3/4"C	7,750
DMDF8	<0	-	-	-	-	-	-	-	-	-	-
SMDF9	<60	120/1 PH.	13	8	0	0	13	8	30/2	3#10, #10G, 3/4"C	6,192
DMDF10	<128	120/208/1 PH.	26	24	0	0	26	24	40/2	3#8, #10G, 3/4"C	11,632
DMDF11		120/208/1 PH.	2	3	0	0	2	3	30/2	3#10, #10G, 3/4"C	2,258
DMDF12		120/208/1 PH.	8	6	0	0	8	6	30/2	3#10, #10G, 3/4"C	5,341
DMDF13		120/208/1 PH.	10	8	0	0	10	8	30/2	3#10, #10G, 3/4"C	6,753
DMDF14		120/208/1 PH.	16	14	0	0	16	14	30/2	3#10, #10G, 3/4"C	10,991
DMDF15		120/208/1 PH.	18	16	0	0	18	16	30/2	3#10, #10G, 3/4"C	12,408

Main Cross Connect - With Cooling Equipment

CABINET	SEAT CNTS	VOLT	CABINET EQUIPMENT AMPS *		SITE COOLING AMPS		FEEDER AMPS		TPP FEEDER		COOLING
		(VOLT/Phase)	Phase A	Phase B	Phase A	Phase B	Phase A	Phase B	BK AMP/POLE	Wire Size	Heat to Room (Btu/hr)
DMDF1	< 96	120/208/1 PH.	23	21	10	10	33	31	60/2	3#6, #8G, 3/4"C	10,915
DMDF2	< 64	120/208/1 PH.	12	10	10	10	22	20	30/2	3#10, #10G, 3/4"C	7,197
DMDF3	< 64	120/208/1 PH.	11	9	10	10	21	19	30/2	3#10, #10G, 3/4"C	7,197
DMDF4	< 64	120/208/1 PH.	10	7	10	10	20	17	30/2	3#10, #10G, 3/4"C	6,331
DMDF5	< 60	120/208/1 PH.	10	8	10	10	20	18	30/2	3#10, #10G, 3/4"C	6,189
DMDF6	< 128	120/208/1 PH.	19	17	17	17	36	34	60/2	3#6, #8G, 3/4"C	13,848
DMDF6 (UPS Fault)	< 128	120/208/1 PH.	26	10	17	17	43	27	60/2	3#6, #8G, 3/4"C	13,848
DMDF7	< 64	120/208/1 PH.	25	22	(ECM)	(ECM)	25	22	40/2	3#8, #10G, 3/4"C	3,728 to ECM
DMDF7 (UPS Fault)	< 64	120/208/1 PH.	34	13	(ECM)	(ECM)	34	13	40/2	3#8, #10G, 3/4"C	3,644 to ECM
DMDF10	<128	120/208/1 PH.	16	14	20	20	36	34	60/2	3#6, #10G, 3/4"C	11,632
DMDF11		120/208/1 PH.	2	3	3	0	5	3	30/2	3#10, #10G, 3/4"C	2,258
DMDF12		120/208/1 PH.	8	6	10	10	18	16	30/2	3#10, #10G, 3/4"C	5,341
DMDF13		120/208/1 PH.	10	6	10	10	20	16	30/2	3#10, #10G, 3/4"C	6,753
DMDF14		120/208/1 PH.	16	14	20	20	36	34	60/2	3#6, #8G, 3/4"C	10,991
DMDF15		120/208/1 PH.	18	16	20	20	38	36	60/2	3#6, #8G, 3/4"C	12,408
SMDF9	<60	120/208/1 PH.	9	8	3	10	12	18	30/2	3#10, #10G, 3/4"C	6,192

* LOAD INCLUDES 1.5 AMPS FOR A CONVENIENCE OUTLET PER CABINET, WHICH IS NOT INDICATED ON CABINET ELEVATION SHEETS.

Table D-3 Intermediate Cross-Connect

Intermediate Cross Connect - Without Cooling Equipment											
CABINET	SEAT CNTS	VOLT	CABINET EQUIPMENT AMPS		SITE COOLING AMPS		FEEDER AMPS		TPP FEEDER		COOLING
		(VOLT/Phase)	Phase A	Phase B	Phase A	Phase B	Phase A	Phase B	BK AMP/POLE	Wire Size	Heat to Room (Btu/hr)
CIDF18	<24	120/208/1 PH.	4	0	0	0	4	0	30/2	3#10, #10G, 3/4"C	1,361
CIDF19	< 72	120/208/1 PH.	16	0	0	0	16	0	30/2	3#10, #10G, 3/4"C	5,243
CIDF37	<12	120/208/1 PH.	4	0	0	0	4	0	30/2	3#10, #10G, 3/4"C	1,420
CIDF38	<36	120/208/1 PH.	10	21	0	0	10	21	30/2	3#10, #10G, 3/4"C	5,626
CIDF39	<18	120/208/1 PH.	20	21	0	0	20	21	30/2	3#10, #10G, 3/4"C	7,759
DBASEX1	N/A	120/208/1 PH.	13	12	0	0	13	12	30/2	3#10, #10G, 3/4"C	9,160
DBASEX2	N/A	120/208/1 PH.	7	5	0	0	7	5	30/2	3#10, #10G, 3/4"C	4,478
DIDF15	<192	120/208/1 PH.	7	7	0	0	7	7	30/2	3#10, #10G, 3/4"C	3,728
DIDF20	< 72	120/208/1 PH.	6	10	0	0	6	10	30/2	3#10, #10G, 3/4"C	4,979
DIDF21	<24	120/208/1 PH.	12	8	0	0	12	8	30/2	3#10, #10G, 3/4"C	6,283
DIDF22	<24	120/208/1 PH.	4	5	0	0	4	5	30/2	3#10, #10G, 3/4"C	3,640
DIDF26	<192	120/208/1 PH.	7	7	0	0	7	7	30/2	3#10, #10G, 3/4"C	5,425
DIDF28	<96	120/208/1 PH.	7	7	0	0	7	7	30/2	3#10, #10G, 3/4"C	5,425
DIDF30	<72	120/208/1 PH.	17	17	0	0	17	17	30/2	3#10, #10G, 3/4"C	12,488
DIDF32	<96	120/208/1 PH.	15	15	0	0	15	15	30/2	3#10, #10G, 3/4"C	11,075
DIDF34	<144	120/208/1 PH.	16	9	0	0	16	9	30/2	3#10, #10G, 3/4"C	8,815
DIDF36	<96	120/208/1 PH.	10	7	0	0	10	7	30/2	3#10, #10G, 3/4"C	7,401
DIDF45	<24	120/208/1 PH.	7	7	0	0	7	7	30/2	3#10, #10G, 3/4"C	5,227
DIDF49	<48	120/208/1 PH.	1	1	0	0	1	1	30/2	3#10, #10G, 3/4"C	5,227
DIDF52	<24	120/208/1 PH.	10	5	0	0	10	5	30/2	3#10, #10G, 3/4"C	5,619

DIDF53	<96	120/208/1 PH.	12	12	0	0	12	12	30/2	3#10, #10G, 3/4"C	9,071
EBOX01	<2	120/1PH	0.2	0	0	0	0	0	20/1	2#10, #10G, 3/4"C	66
HIDF8	<24	120/208/1 PH.	5	5	0	0	5	5	30/2	3#10, #10G, 3/4"C	3,754
HIDF13	< 48	120/208/1 PH.	5	10	0	0	5	10	30/2	3#10, #10G, 3/4"C	4,277
HIDF24	< 11	120/208/1 PH.	4	0	0	0	4	0	30/2	3#10, #10G, 3/4"C	1,420
HIDF40	< 18	120/208/1 PH.	5	5	0	0	5	5	30/2	3#10, #10G, 3/4"C	3,920
HIDF42	< 10LRE	120/208/1 PH.	4	0	0	0	4	0	30/2	3#10, #10G, 3/4"C	1,364
HIDF46	<24	120/208/1 PH.	7	7	0	0	7	7	30/2	3#10, #10G, 3/4"C	5,227
HIDF50	<48	120/208/1 PH.	7	7	0	0	7	7	30/2	3#10, #10G, 3/4"C	5,227
HIDF51	< 12	120/208/1 PH.	5	0	0	0	5	0	30/2	3#10, #10G, 3/4"C	1,849
QIDF9	< 24	120/208/1 PH.	5	0	0	0	5	0	30/2	3#10, #10G, 3/4"C	553
QIDF16	<6	120/208/1 PH.	5	5	0	0	5	5	30/2	3#10, #10G, 3/4"C	2,321
QIDF17	<10	120/208/1 PH.	5	7	0	0	5	7	30/2	3#10, #10G, 3/4"C	3,013
SIDF1	< 192	120/208/1 PH.	7	0	0	0	7	0	30/2	3#10, #10G, 3/4"C	3,728
SIDF2	< 72	120/208/1 PH.	9	8	0	0	9	8	30/2	3#10, #10G, 3/4"C	5,170
SIDF3	< 48	120/208/1 PH.	3	6	0	0	3	6	30/2	3#10, #10G, 3/4"C	2,252
SIDF4	< 48	120/208/1 PH.	5	11	0	0	5	11	30/2	3#10, #10G, 3/4"C	5,170
SIDF5	< 120	120/208/1 PH.	6	16	0	0	6	16	30/2	3#10, #10G, 3/4"C	3091 to ECM
SIDF6	< 144	120/208/1 PH.	7	11	0	0	7	11	30/2	3#10, #10G, 3/4"C	5,004
SIDF7	< 24	120/208/1 PH.	11	3	0	0	11	3	30/2	3#10, #10G, 3/4"C	4,978
SIDF12	<0	Elect Not Reqd	-	-	-	-	-	-	-	-	
SIDF25	< 168	120/208/1 PH.	9	9	0	0	9	9	30/2	3#10, #10G, 3/4"C	6,837

Intermediate Cross Connect - Without Cooling Equipment(CONTINUED)

CABINET	SEAT CNTS	VOLT	CABINET EQUIPMENT AMPS		SITE COOLING AMPS		FEEDER AMPS		TPP FEEDER		COOLING
		(VOLT/Phase)	Phase A	Phase B	Phase A	Phase B	Phase A	Phase B	BK AMP/POLE	Wire Size	Heat to Room (Btu/hr)
SIDF27	<96	120/208/1 PH.	7	7	0	0	7	7	30/2	3#10, #10G, 3/4"C	5,425
SIDF29	< 480	120/208/1 PH.	18	18	0	0	18	18	30/2	3#10, #10G, 3/4"C	13,125
SIDF31	< 336	120/208/1 PH.	15	15	0	0	15	15	30/2	3#10, #10G, 3/4"C	11,075
SIDF33	< 120	120/208/1 PH.	15	15	0	0	15	15	30/2	3#10, #10G, 3/4"C	11,075
SIDF35	<96	120/208/1 PH.	13	6	0	0	13	6	30/2	3#10, #10G, 3/4"C	7,401
SIDF41	< 24	120/208/1 PH.	20	10	0	0	20	10	30/2	3#10, #10G, 3/4"C	6,256
SIDF44	< 24	120/208/1 PH.	7	7	0	0	7	7	30/2	3#10, #10G, 3/4"C	5,227
SIDF48	<48	120/208/1 PH.	7	7	0	0	7	7	30/2	3#10, #10G, 3/4"C	5,227
WIDF10	< 24	120/208/1 PH.	5	3	0	0	5	3	30/2	3#10, #10G, 3/4"C	1,706
WIDF11	< 24	120/208/1 PH.	2	0	0	0	2	0	30/2	3#10, #10G, 3/4"C	829
WIDF14	< 24	120/208/1 PH.	2	0	0	0	2	0	30/2	3#10, #10G, 3/4"C	829
WIDF23	< 7	120/208/1 PH.	2	0	0	0	2	0	30/2	3#10, #10G, 3/4"C	829
WIDF43	< 10LRE	120/208/1 PH.	2	0	0	0	2	0	30/2	3#10, #10G, 3/4"C	770
WIDF47	< 24	120/208/1 PH.	7	3	0	0	7	3	30/2	3#10, #10G, 3/4"C	2,526
WIDF54	< 24	120/208/1 PH.	6	0	0	0	6	0	30/2	3#10, #10G, 3/4"C	2,383
WIDF55	< 12	120/208/1 PH.	5	0	0	0	5	0	30/2	3#10, #10G, 3/4"C	1,849

Intermediate Cross Connect - With Cooling Equipment

CABINET	SEAT CNTS	VOLT	CABINET EQUIPMENT AMPS *		SITE COOLING AMPS		FEEDER AMPS		TPP FEEDER		COOLING
		(VOLT/Phase)	Phase A	Phase B	Phase A	Phase B	Phase A	Phase B	BK AMP/POLE	Wire Size	Heat to Room (Btu/hr)
CIDF37	<12	120/208/1 PH.	4	0	0	4	4	4	30/2	3#10, #10G, 3/4"C	1,420
CIDF38	<36	120/208/1 PH.	10	21	0	4	10	25	30/2	3#10, #10G, 3/4"C	5,626
CIDF39	<18	120/208/1 PH.	20	21	10	10	30	31	40/2	3#8, #10G, 3/4"C	7,759
DBASEX1	N/A	120/208/1 PH.	13	12	10	10	23	22	40/2	3#8, #10G, 3/4"C	9,160
DBASEX2	N/A	120/208/1 PH.	7	5	0	4	7	9	30/2	3#10, #10G, 3/4"C	4,478
DIDF15	<192	120/208/1 PH.	7	7	0	3	7	10	30/2	3#10, #10G, 3/4"C	3,728
DIDF20	< 72	120/208/1 PH.	6	10	0	4	6	14	40/2	3#8, #10G, 3/4"C	4,979
DIDF21	<24	120/208/1 PH.	12	8	4	0	16	8	40/2	3#8, #10G, 3/4"C	6,283
DIDF22	<24	120/208/1 PH.	4	5	4	0	8	5	40/2	3#8, #10G, 3/4"C	3,640
DIDF26	<192	120/208/1 PH.	7	7	10	10	17	17	30/2	3#10, #10G, 3/4"C	5,425
DIDF28	<96	120/208/1 PH.	7	7	10	10	17	17	30/2	3#10, #10G, 3/4"C	5,425
DIDF30	<72	120/208/1 PH.	17	17	20	20	37	37	60/2	3#6, #10G, 3/4"C	12,488
DIDF32	<96	120/208/1 PH.	15	15	20	20	35	35	60/2	3#6, #10G, 3/4"C	11,075
DIDF34	<144	120/208/1 PH.	16	9	10	10	26	19	40/2	3#8, #10G, 3/4"C	8,815
DIDF36	<96	120/208/1 PH.	10	7	10	10	20	17	40/2	3#8, #10G, 3/4"C	7,401
DIDF45	<24	120/208/1 PH.	7	7	0	4	7	11	30/2	3#10, #10G, 3/4"C	5,227
DIDF49	<48	120/208/1 PH.	1	1	0	4	1	5	30/2	3#10, #10G, 3/4"C	5,227
DIDF52	<24	120/208/1 PH.	10	5	0	4	10	9	30/2	3#10, #10G, 3/4"C	5,619
DIDF53	<96	120/208/1 PH.	12	22	20	20	32	42	60/2	3#6, #10G, 3/4"C	9,071
HIDF8	<24	120/208/1 PH.	5	5	0	4	5	9	30/2	3#10, #10G, 3/4"C	3,754
HIDF13	< 48	120/208/1 PH.	5	10	0	4	5	14	30/2	3#10, #10G, 3/4"C	4,277
HIDF40	< 18	120/208/1 PH.	5	5	0	3	5	9	30/2	3#10, #10G, 3/4"C	3,920
HIDF46	<24	120/208/1 PH.	7	7	0	4	7	11	30/2	3#10, #10G, 3/4"C	5,227

HIDF50	<48	120/208/1 PH.	7	7	0	4	7	11	30/2	3#10, #10G, 3/4"C	5,227
HIDF51	< 12	120/208/1 PH.	5	0	0	3	5	3	30/2	3#10, #10G, 3/4"C	1,849
QIDF9	< 24	120/208/1 PH.	5	0	0	3	5	3	30/2	3#10, #10G, 3/4"C	553
QIDF16	<6	120/208/1 PH.	5	5	0	3	5	8	30/2	3#10, #10G, 3/4"C	2,321
QIDF17	<10	120/208/1 PH.	5	7	0	3	5	10	30/2	3#10, #10G, 3/4"C	3,013
SIDF1	< 192	120/208/1 PH.	7	0	10	10	17	10	30/2	3#10, #10G, 3/4"C	3,728
SIDF2	< 72	120/208/1 PH.	9	8	0	4	9	12	60/2	3#6, #10G, 3/4"C	5,170
SIDF3	< 48	120/208/1 PH.	3	6	0	3	3	10	30/2	3#10, #10G, 3/4"C	2,252
SIDF4	< 48	120/208/1 PH.	5	11	0	4	5	15	60/2	3#6, #10G, 3/4"C	5,170
SIDF5	< 120	120/208/1 PH.	6	16	0	3	6	19	30/2	3#10, #10G, 3/4"C	3091 to ECM
SIDF6	< 144	120/208/1 PH.	7	11	0	4	7	15	30/2	3#10, #10G, 3/4"C	5,004
SIDF7	< 24	120/208/1 PH.	11	3	4	0	15	3	60/2	3#6, #10G, 3/4"C	4,978
SIDF25	< 168	120/208/1 PH.	9	9	10	10	19	19	30/2	3#10, #10G, 3/4"C	6,837
SIDF27	<96	120/208/1 PH.	7	7	10	10	17	17	30/2	3#10, #10G, 3/4"C	5,425
SIDF29	< 480	120/208/1 PH.	18	18	20	20	38	38	60/2	3#6, #10G, 3/4"C	13,125
SIDF31	< 336	120/208/1 PH.	15	15	20	20	35	35	60/2	3#6, #10G, 3/4"C	11,075
SIDF33	< 120	120/208/1 PH.	15	15	10	10	25	25	40/2	3#8, #10G, 3/4"C	11,075
SIDF35	<96	120/208/1 PH.	13	6	10	10	23	16	40/2	3#8, #10G, 3/4"C	7,401
SIDF41	< 24	120/208/1 PH.	20	10	10	10	30	20	40/2	3#8, #10G, 3/4"C	6,256
SIDF44	< 24	120/208/1 PH.	7	7	0	4	7	11	30/2	3#10, #10G, 3/4"C	5,227
SIDF48	<48	120/208/1 PH.	7	7	0	4	7	11	30/2	3#10, #10G, 3/4"C	5,227
WIDF10	< 24	120/208/1 PH.	5	3	0	3	5	7	30/2	3#10, #10G, 3/4"C	1,706
WIDF47	< 24	120/208/1 PH.	0	0	0	3	0	3	30/2	3#10, #10G, 3/4"C	2,526
WIDF54	< 24	120/208/1 PH.	6	0	0	3	6	3	30/2	3#10, #10G, 3/4"C	2,383
WIDF55	< 12	120/208/1 PH.	5	0	0	3	5	3	30/2	3#10, #10G, 3/4"C	1,849

D-1 Typical On-Line Diagram for Facility POPs

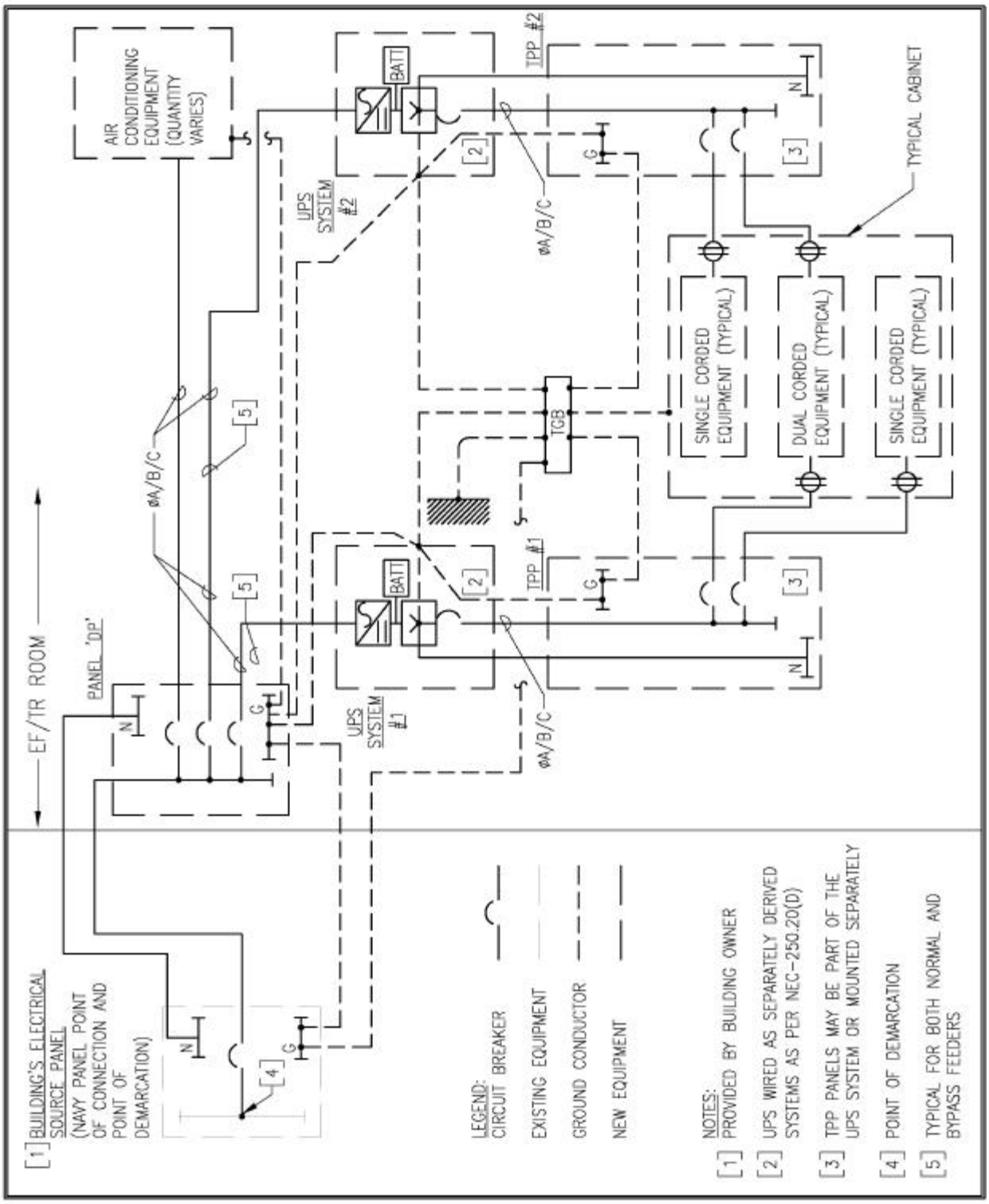

Figure D-2 Typical One-Line Diagram for Facility MC's/IC's

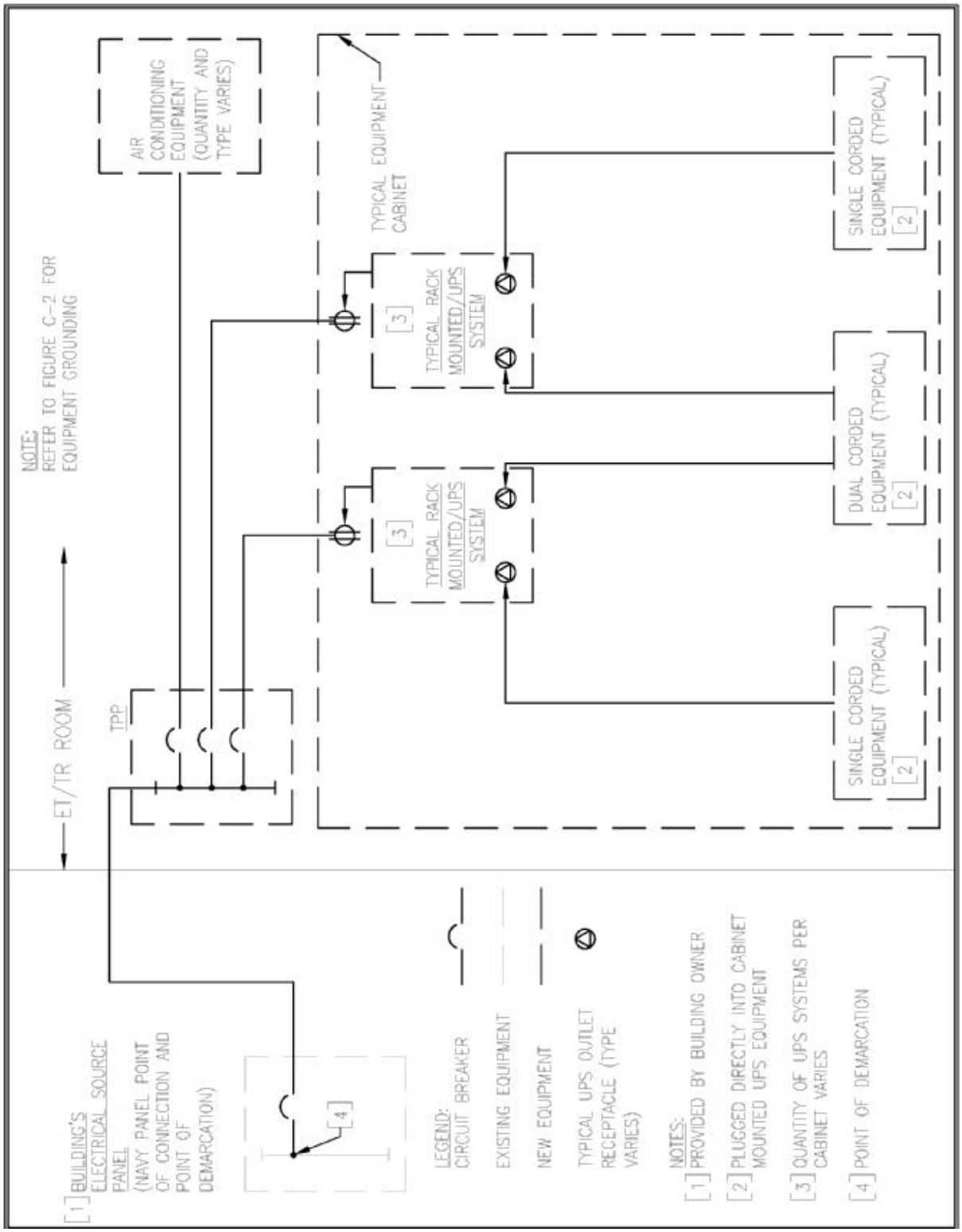

APPENDIX E

Protected Distribution Systems

E-1. Protected Distribution Systems (PDS). Provide in accordance with the following guidance and with NAVSO P-5239-22, *Protected Distribution System (PDS) Guidebook* and the CNO//N6142// Message 091948Z JAN 03, *Update of Protected Distribution System (PDS) Guidance*. See SECNAVINST 5510.36, *Department of the Navy (DoN) Information Security Program (ISP) Regulation* for additional clarification. When transmission of unencrypted classified information such as SIPRNET is a project requirement, the Designer of Record must coordinate closely with EFD Technical Reviewer, Contracting Officer, and Activity early in the design to define the routing of PDS, outlet locations, and area classifications. PDS must originate in a Secure Room (SR) or a Controlled Access Area (CAA) and must terminate in a SR, CAA, or Restricted Access Area (RAA). If it is identified that the entire area in which a distribution system will be installed can be certified as a controlled access area (CAA), PDS will not be required. While unprotected cables may be run within the CAA, unprotected cables must not be run outside the perimeter of the CAA. There are three parallel designs associated with PDS implementation, the facility, the PDS infrastructure, and the associated network equipment. The Government's facility designer can be an Architectural Engineering firm or In-House staff. The Government's PDS designer can be the facility designer or the NMCI contractor. The PDS designer is responsible for forwarding the design submittal to SPAWARSYSCEN Charleston for approval and certification. SPAWARSYSCEN Charleston is the Technical Review Authority and engineering support agent for all DoN PDS. For an overview of the design and approval process, see PDS Design/Approval Process flowcharts in Figures E-1, E-2, & E-3.

E-2 Controlled Access Area (CAA). A CAA is a physical area such as a building or room under physical control and where only personnel cleared to the level of the information being processed are authorized unrestricted access. All other personnel are either escorted or are under continuous surveillance. Within a CAA, a PDS will not be required for classified information processed at or below the classification level of the CAA. To be certified as a CAA the area must meet the following physical requirements.

E-2.1 Walls, Floor and Roof. The walls, floor, and roof construction must be of permanent construction materials; i.e. plaster, gypsum wallboard, metal panels, hardboard, wood, plywood, or other materials offering resistance to, and evidence of unauthorized entry into the area. For new construction, walls must be extended from true floor to true ceiling (structural floor to structural ceiling) with permanent construction materials. In existing facilities, walls may be extended with 18-gauge expanded steel screen or equivalent wire mesh.

E-2.2 Doors. The access door to the area must be substantially constructed of wood or metal. As a minimum, the door must have a high security dead bolt lock with a 25-mm (1-inch) throw and a cylinder that meets the requirements of Underwriters Laboratories Inc. UL 437 *Standard for Key Locks*, 7th edition dated 4 August 2000. As an alternative, a built-in GSA-approved combination lock meeting Federal Specification FF-L-2740 can be used. The hinge pins of outswing doors must be peened, brazed, or spot-welded to prevent removal. When double doors are used, an astragal will be installed on the active leaf of the door. Doors other than the access door must be secured from the inside (for example, by a dead bolt lock, panic dead bolt lock, or rigid wood or metal bar which extends across the width of the door, or by any other means that will prevent entry from the outside.

E-2.3 Windows. The area should not contain windows. When windows are used they should be permanently secured to prevent opening. For new construction, all windows that might reasonably afford visual observation of classified activities within the facility must be made opaque. In existing facilities, windows must be made opaque or equipped with blinds, drapes, or other coverings. Windows that are less than 18 feet above the ground measured from the bottom of the window, or are easily accessible by means of objects directly beneath the windows must be constructed from or covered with materials, which provide protection from forced entry and shall be protected by an intrusion detection system. The protection provided to the windows need be no stronger than the strength of the contiguous walls.

E-2.4 Openings. Utility openings such as ducts and vents must be kept at less than man-passable (96 square inches) opening. Openings larger than 96 square inches must be hardened per the Military Handbook 1013/1A.

E-2.5 Restricted Access Area (RAA). An RAA is a physical area such as a building or room where only personnel cleared to the level of the information being processed are authorized unrestricted access, but does not meet all of the physical security requirements of a CAA. Within an RAA the PDS must be extended to the workstation and must be terminated in a lock box, which contains the connection for the network. Printers and other devices associated with the network must be located in either a CAA, SR, or located within a lock box, which is secured with an approved PDS lock. The access doors to the RAA must comply with the associated requirements of a CAA.

E-2.6 Secure Room (SR). A SR is a physical area that meets the construction requirements of exhibit 10a of SECNAVINST 5510.36 for "open storage" at the classification level of the information being processed. A PDS is not required for classified information processed at or below the authorized "open storage" level for the SR. Provide an empty conduit with pullwire from the SR to the closest telecommunication room on the same floor. Terminate the conduit in the SR in the space dedicated for network equipment. Coordinate the space

requirements for network equipment and conduit sizing with the NMCI contractor. This conduit is intended for encrypted classified information and does not need to meet PDS requirements.

E-2.7 Horizontal Cable. All horizontal cable must be Category 5e UTP. Cabling must originate in the secure room and terminate at the workstation.

E-2.8 PDS Raceway. The carrier must be constructed of electrical metallic tubing (EMT) or galvanized rigid steel (GRS), utilizing elbows, couplings, nipples, and connectors of the same materials. All connections must be permanently sealed completely around all surfaces such as welding or epoxy. Continuous or tack welding of the connection is acceptable. If pull boxes are used, the covers must be sealed to the mating surfaces after installation or the covers must have non-removable hinge pins and must be secured with a General Services Administration (GSA) approved changeable combination padlock Federal Specification FF-P-110. Boxes with pre-punched knockouts must not be used.

E-2.9 Terminations. Provide outlets at all locations requiring unencrypted classified information such as SIPRNET. Terminate cables on eight-position Category 5e jacks, wired to the T568A configuration in a surface mounted lockbox equipped with an approved PDS lock meeting the requirements of NAVSO P-5239-22. Provide and terminate cabling in the secure room. Coordinate locations with the NMCI contractor or the BCO, as applicable. PDS can only be terminated in a CAA or a Restricted Access Area (RAA). PDS can pass through but must not be terminated in a Limited Access Area (LAA) or Unrestricted Access Area (UAA).

PDS DESIGN/APPROVAL PROCESS

Page 1 of 3 – Rev. 9/10/03

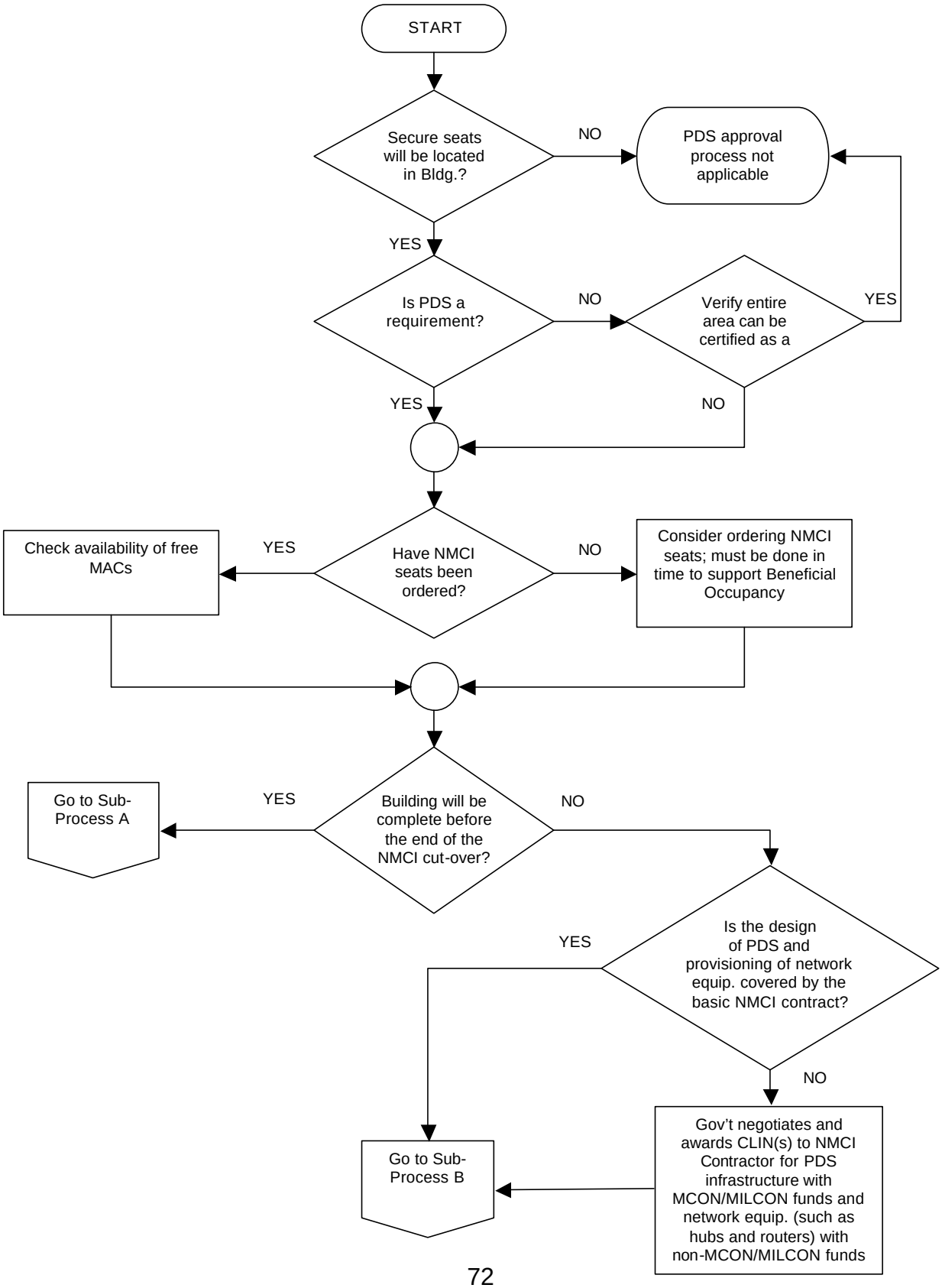

PDS SUB-PROCESS "A" (PRIOR TO NMCI CUT-OVER)

Page 2 of 3 – Rev. 9/10/03

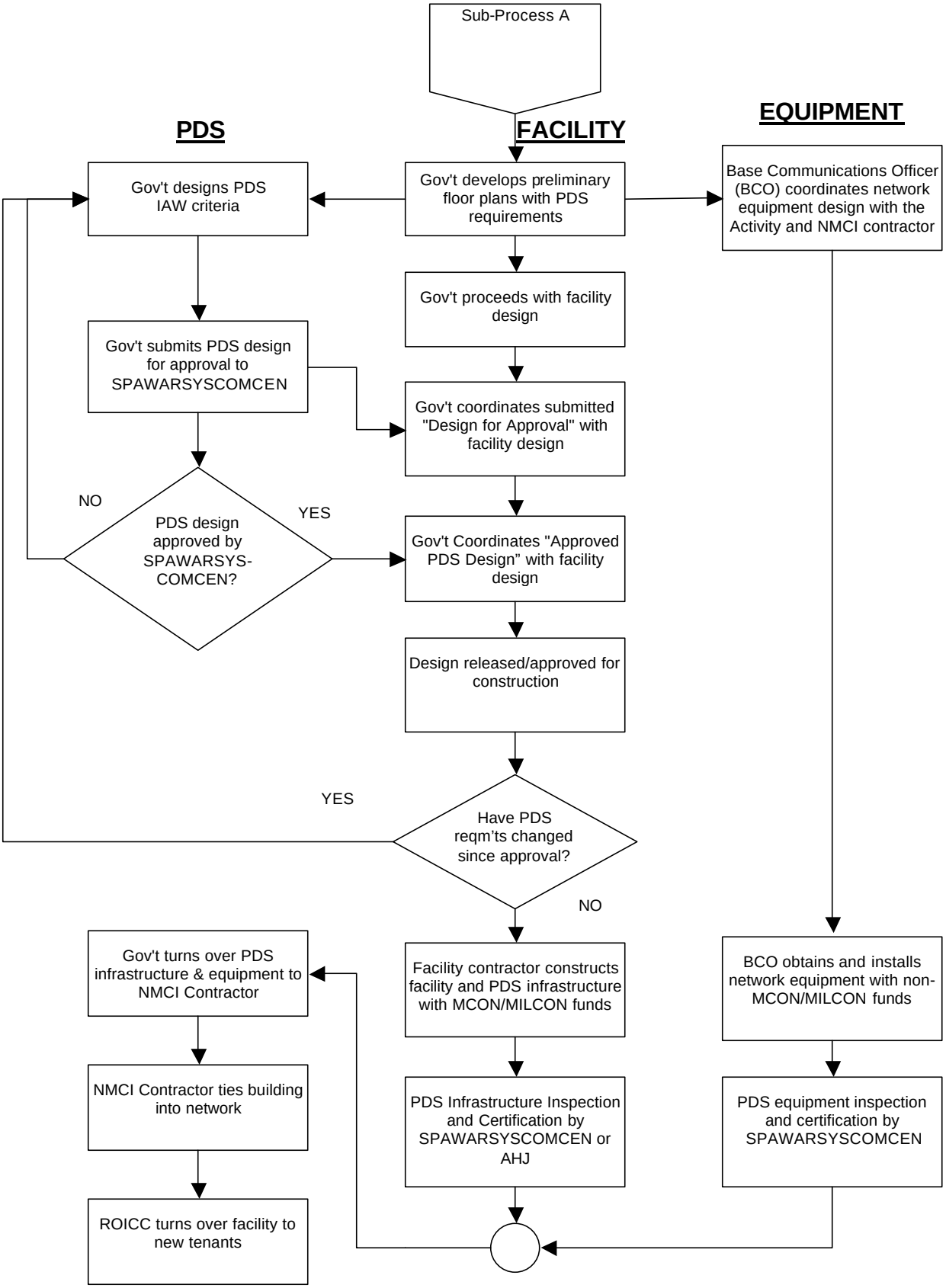

PDS SUB-PROCESS "B" (AFTER NMCI CUT-OVER)

Page 3 of 3 – Rev. 9/10/03

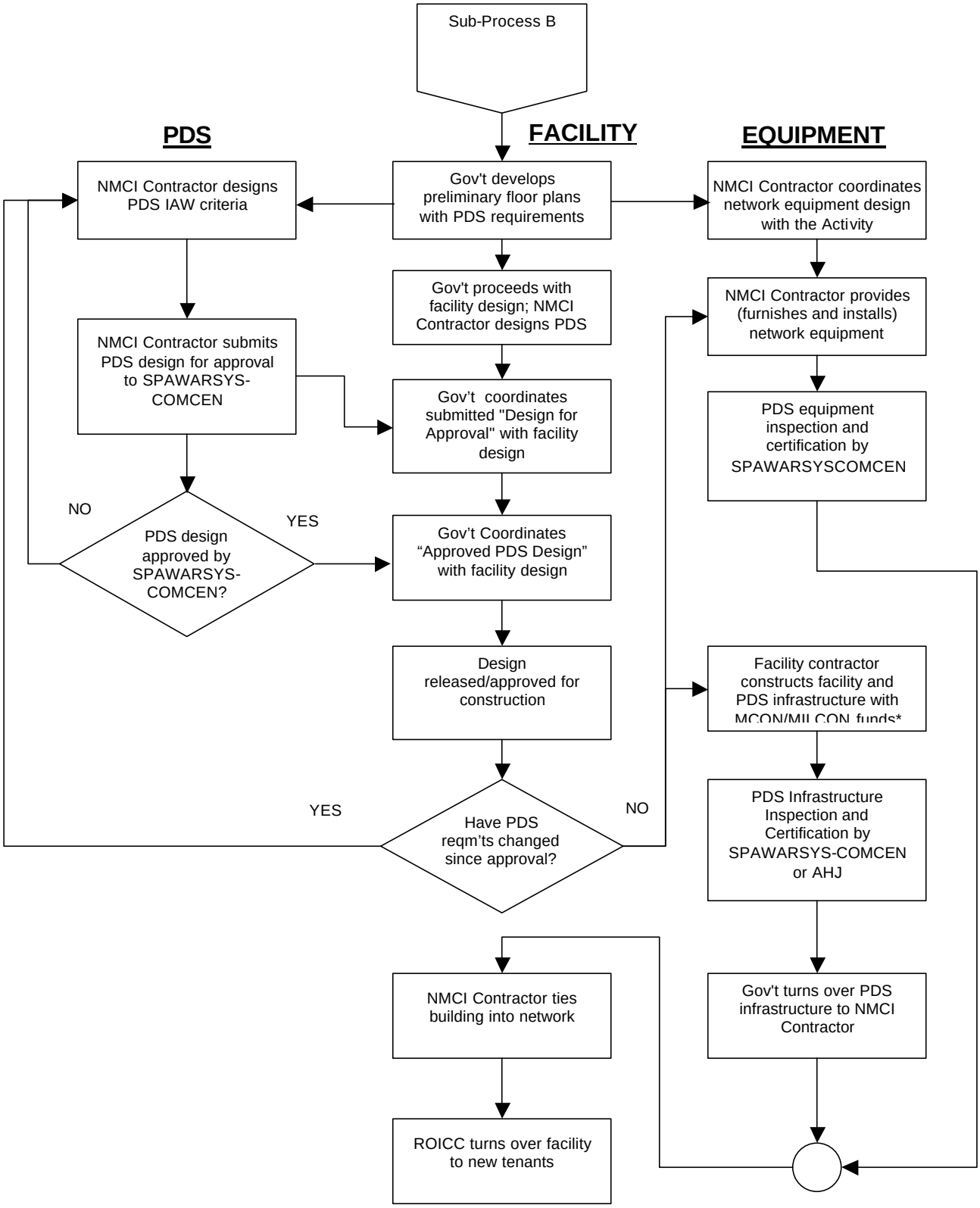

* Note: There may be projects where it is desirable to negotiate and award CLIN(s) to have the NMCI Contractor also provide the PDS infrastructure in addition to the network equipment.