Carbon Adsorber–Vapor Phase
GPC 3.85

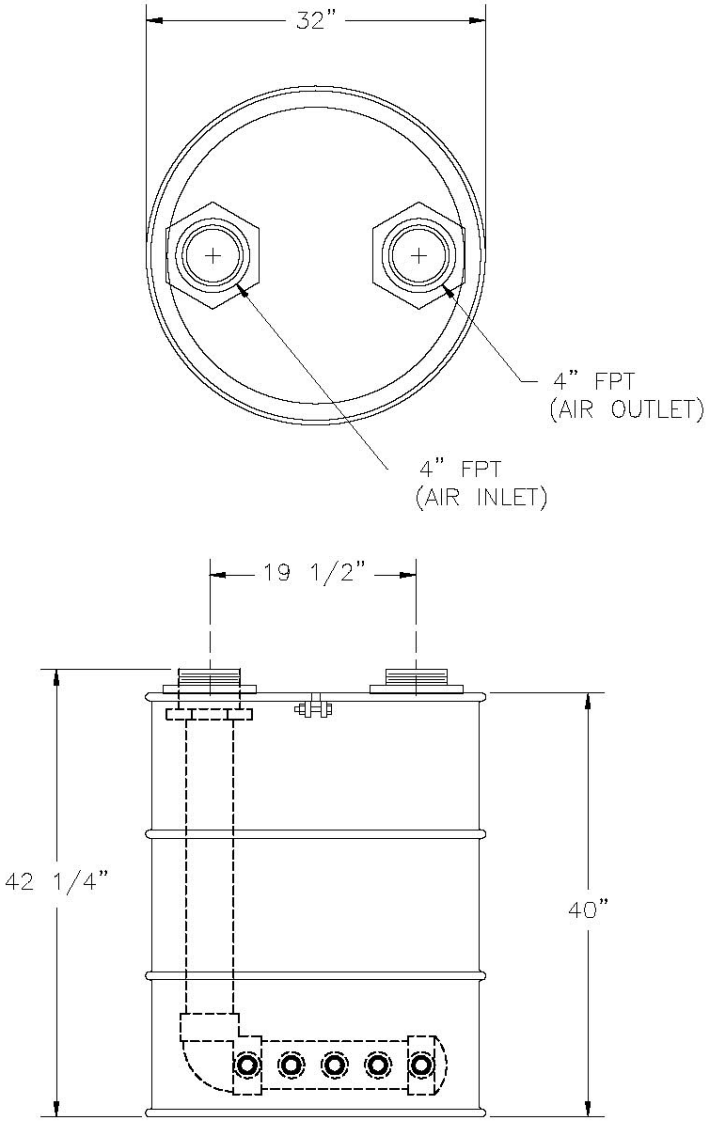

Sales Drawing #130148
94.06.29
© CARBONAIR 1994